Key: 2727

Town of SCITUATE - Fiscal Year 2024

10/18/2023 5:31 pm SEQ #: 2,630

LEGAL

CURRENT OWNER	PARCEL ID	LOCATION
CASEY TIMOTHY 17 SURFSIDE RD SCITUATE, MA 02066	15-1-8-0	17 SURFSIDE RD

TRANSFER HISTORY	DOS	T	SALE PRICE	BK-PG (Cert)
CASEY TIMOTHY	06/21/2005	QS	2,052,500	30755-293
RONDER RICHARD W	07/29/1996	QS	638,625	14543-12
CIPAU GABRIEL & DELACOURT	08/04/1995	QS	600,000	13742-253

CLASS	CLASS%	DESCRIPTION	BN ID	BN	CARD
1010	100	SINGLE FAMILY		1	1 of 1

PMT NO	PMT DT	TY	DESC	AMOUNT	INSP	BY	1st	%
98-57	03/03/1998	2	ADDITIONS				100	100
96-358	08/05/1996	3	ALTERATIONS				100	100
92-435	05/01/1992	2	ADDITIONS				100	100
91-765	04/06/1992	2	ADDITIONS				100	100
91-765	11/26/1991	3	ALTERATIONS				100	100

LAND

CD	T	AC/SF/UN	Ngh	Infl1	Infl2	ADJ BASE	SAF	Infl3	Lpi	VC	CREDIT AMT	ADJ VALUE
100	S	14,458	MB 1.00	100 1.00	100 1.00	1,760,000	2.53	100 1.00	WF5 4.00			1,476,640

TOTAL	14,462 SF	ZONING		FRNT	69
Ngh	MINOT BCH	NOTE	. . . .		
Infl1	FACTOR 100				
Infl2	PHY 100				

ASSESSED	CURRENT	PREVIOUS
LAND	1,476,600	1,342,400
BUILDING	1,311,900	1,098,000
DETACHED	0	0
OTHER	0	0
TOTAL	**2,788,500**	**2,440,400**

DETACHED

TY	QUAL	COND	DIM/NOTE	YB	UNITS	ADJ PRICE	RCNLD

PHOTO 11/07/2003

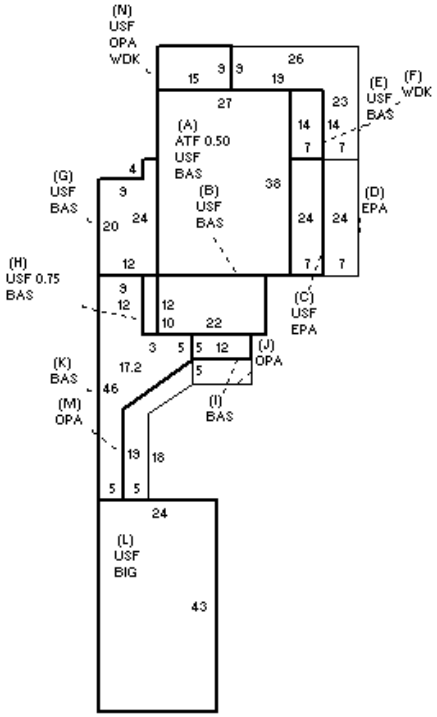

BUILDING

BUILDING	CD	ADJ	DESC
MODEL	1		RESIDENTIAL
STYLE	7	1.20	CONVENTIONAL [100%]
QUALITY	V	1.40	VERY GOOD [100%]
FRAME	1	1.00	WOOD FRAME [100%]

MEASURE	3/30/2009	PL
LIST		
REVIEW	3/30/2011	KT

BLDG COMMENTS
OTHER FIX=SHOWER
SALES REVIEW

YEAR BLT	1929	SIZE ADJ	1.000
NET AREA	5,669	DETAIL ADJ	1.200
$NLA(RCN)	$309	OVERALL	1.000

CAPACITY	UNITS	ADJ
STORIES	2.5	1.00
ROOMS	14	1.00
BEDROOMS	5	1.00
BATHROOMS	3	1.00
# 1/2 BATHS	1	1.00
TOT FIXTURES	13	$17,472
# UNITS	1	1.00

ELEMENT	CD	DESCRIPTION	ADJ
FOUNDATION	4	CONT BSMT WALL	1.00
EXT COVER	4	VINYL	1.00
ROOF SHAPE	1	GABLE	1.00
ROOF COVER	1	ASPH SHINGLES	1.00
FLOOR COVER	99	N/A	1.00
INT FINISH	99	N/A	1.00
HEATING/COOLING	1	FORCED AIR	1.00
FUEL SOURCE	99	N/A	1.00

S	BAT	T	DESCRIPTION	UNITS	YB	ADJ PRICE	RCN
+	BAS	L	BASE AREA	2,154	1929	298.19	642,299
+	USF	L	UPPER STORY FIN	3,002	1929	271.17	814,055
A	ATF	L	ATTIC FINISH	513	1929	192.66	98,836
+	EPA	N	ENCLOSED PORCH	336		126.28	42,430
+	WDK	N	WOOD DECK	467		53.76	25,106
+	OPA	N	OPEN PORCH	342		72.10	24,658
L	BIG	N	BUILT-IN GARAGE	1,032		64.53	66,595
	F31	O	FPL 3S 1OP	1		12,875.80	12,876
	HTB	O	HOT TUB	1		4,828.60	4,829

TOTAL RCN	1,749,156
CONDITION ELEM	CD
EXTERIOR	
INTERIOR	
KITCHEN	
BATHS	
HEAT	
ELECT	

EFF.YR/AGE	1990 / 32	
COND	25	25 %
FUNC	0	
ECON	0	
DEPR	25	% GD 75
RCNLD		$1,311,900