**Key: 2820**

# Town of SCITUATE - Fiscal Year 2024

10/18/2023 5:31 pm SEQ #: 2,727

## LEGAL

| CURRENT OWNER | PARCEL ID | LOCATION |
|---|---|---|
| FITZPATRICK JOAN K TR<br>18 HOOD RD<br>SCITUATE, MA 02066 | 22-11-8-0 | 18 HOOD RD |

| TRANSFER HISTORY | DOS | T | SALE PRICE | BK-PG (Cert) |
|---|---|---|---|---|
| FITZPATRICK JOAN K TR | 04/15/2022 | H | 1,045,000 | (133723) |
| MASON GEOFFREY M TR | 02/01/2022 | H | | (133396) |
| FITZPATRICK JAMES A & JOA | 06/29/1956 | QS | | (23680) |

| CLASS | CLASS% | DESCRIPTION | BN ID | BN | CARD |
|---|---|---|---|---|---|
| 1010 | 100 | SINGLE FAMILY | | 1 | 1 of 1 |

| PMT NO | PMT DT | TY | DESC | AMOUNT | INSP | BY | 1st | % |
|---|---|---|---|---|---|---|---|---|
| 23-0588 | 07/12/2023 | 3 | ALTERATIONS | 68,000 | | | 0 | 0 |
| | | 7 | OTHERS | | 02/01/2022 | JD | 100 | 100 |
| 20-81 | 02/04/2020 | 3 | ALTERATIONS | 100,000 | 05/11/2020 | JD | 100 | 100 |
| 19-546 | 12/02/2019 | 5 | SPLIT/SUB/LA | | 04/28/2020 | JD | 100 | 100 |
| | | 7 | OTHERS | | 06/21/2006 | | 100 | 100 |

## LAND

| CD | T | AC/SF/UN | Ngh | | Infl1 | | Infl2 | | ADJ BASE | SAF | Infl3 | | Lpi | | VC | CREDIT AMT | ADJ VALUE |
|---|---|---|---|---|---|---|---|---|---|---|---|---|---|---|---|---|---|
| 100 | S | 40,000 | NS | 1.00 | 100 | 1.00 | 100 | 1.00 | 880,000 | 1.00 | 100 | 1.00 | WV5 | 2.00 | | | 808,080 |
| 300 | A | 1.211 | NS | 1.00 | 100 | 1.00 | 100 | 1.00 | 39,600 | 1.00 | 100 | 1.00 | WV5 | 2.00 | | | 47,960 |

| TOTAL | 2.129 Acres | ZONING | | FRNT | 193 |
|---|---|---|---|---|---|
| Ngh | NO. SCITUATE | NOTE | . . . .C/W 22-11-5-B, 22-11-5-C & 22-11-9-B | | |
| Infl1 | FACTOR 100 | | | | |
| Infl2 | PHY 100 | | | | |

| ASSESSED | CURRENT | PREVIOUS |
|---|---|---|
| LAND | 856,000 | 780,600 |
| BUILDING | 728,200 | 648,000 |
| DETACHED | 34,400 | 32,800 |
| OTHER | 0 | 0 |
| TOTAL | **1,618,600** | **1,461,400** |

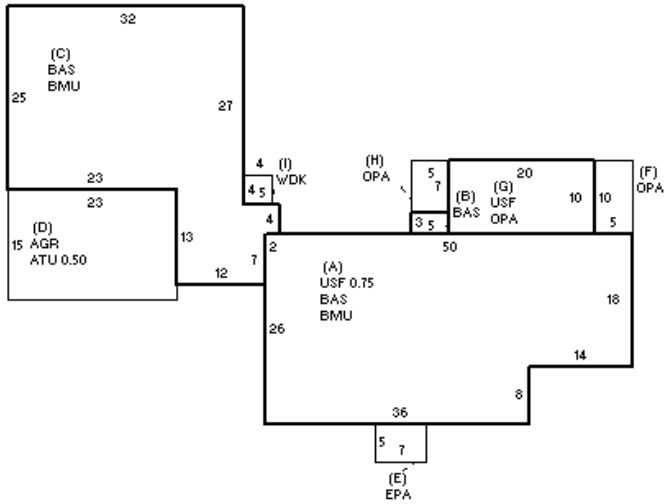


## DETACHED

| TY | QUAL | | COND | | DIM/NOTE | YB | UNITS | ADJ PRICE | RCNLD |
|---|---|---|---|---|---|---|---|---|---|
| SHF | A | 1.00 | 40 | 0.60 | 12X11 | | 132 | 13.55 | 1,100 |
| IPC | A | 1.00 | 30 | 0.70 | 32X18 | | 576 | 34.81 | 14,000 |
| OPA | A | 1.00 | 40 | 0.60 | 10X12 | | 120 | 30.96 | 2,200 |
| CTA | A | 1.00 | 30 | 0.70 | TENNIS COURT | | 1 | 24,469.30 | 17,100 |

PHOTO 05/13/2020

BLDG COMMENTS

## BUILDING

| BUILDING | CD | ADJ | DESC |
|---|---|---|---|
| MODEL | 1 | | RESIDENTIAL |
| STYLE | 4 | 1.10 | CAPE [100%] |
| QUALITY | G | 1.20 | GOOD [100%] |
| FRAME | 1 | 1.00 | WOOD FRAME [100%] |

| | | |
|---|---|---|
| MEASURE | 5/11/2020 | JD |
| LIST | 5/11/2020 | EST |
| REVIEW | 9/1/2022 | JD |

| | | | |
|---|---|---|---|
| YEAR BLT | 1961 | SIZE ADJ | 1.000 |
| NET AREA | 3,252 | DETAIL ADJ | 1.144 |
| $NLA(RCN) | $303 | OVERALL | 1.000 |

| CAPACITY | UNITS | ADJ |
|---|---|---|
| STORIES | 1.75 | 1.00 |
| ROOMS | 11 | 1.00 |
| BEDROOMS | 4 | 1.00 |
| BATHROOMS | 3 | 1.00 |
| # 1/2 BATHS | 1 | 1.00 |
| TOT FIXTURES | 11 | $12,080 |
| # UNITS | 1 | 1.00 |

| ELEMENT | CD | DESCRIPTION | ADJ |
|---|---|---|---|
| FOUNDATION | 4 | CONT BSMT WALL | 1.00 |
| EXT COVER | 1 | WD SHINGLES | 1.00 |
| ROOF SHAPE | 1 | GABLE | 1.00 |
| ROOF COVER | 2 | WOOD SHINGLES | 1.01 |
| FLOOR COVER | 24 | COMB | 1.00 |
| INT FINISH | 2 | DRYWALL | 1.00 |
| HEATING/COOLING | 9 | WARM/COOL AIR | 1.03 |
| FUEL SOURCE | 1 | OIL | 1.00 |

| S | BAT | T | DESCRIPTION | UNITS | YB | ADJ PRICE | RCN |
|---|---|---|---|---|---|---|---|
| + | BMU | N | BSMT UNFINISHED | 2,146 | | 47.94 | 102,887 |
| + | USF | L | UPPER STORY FIN | 1,091 | 1961 | 233.69 | 254,957 |
| + | BAS | L | BASE AREA | 2,161 | 1961 | 256.97 | 555,323 |
| D | ATU | N | ATTIC UNF | 173 | | 44.40 | 7,681 |
| D | AGR | N | ATT GARAGE | 345 | | 58.85 | 20,303 |
| E | EPA | N | ENCLOSED PORCH | 35 | | 108.24 | 3,788 |
| + | OPA | N | OPEN PORCH | 285 | | 61.80 | 17,614 |
| I | WDK | N | WOOD DECK | 16 | | 46.05 | 737 |
| | F11 | O | FPL 1S 1OP | 1 | | 8,737.20 | 8,737 |
| | GEN | O | GENERATOR | 1 | | 0.00 | |

| TOTAL RCN | 984,107 |
|---|---|

| CONDITION ELEM | CD |
|---|---|
| EXTERIOR | A |
| INTERIOR | G |
| KITCHEN | A |
| BATHS | A |
| HEAT | U |
| ELECT | U |

| EFF.YR/AGE | 1984 / 38 | | |
|---|---|---|---|
| COND | 26 | 26 % | |
| FUNC | 0 | | |
| ECON | 0 | | |
| DEPR | 26 | % GD | 74 |
| RCNLD | $728,200 | | |