Key: **283**

Town of SCITUATE - Fiscal Year 2024

10/18/2023 5:31 pm SEQ #: 270

LEGAL

CURRENT OWNER	PARCEL ID	LOCATION
DESIMONE MICHAEL & NICOLE **43 STEARNS RD** **SCITUATE, MA 02066**	**42-3-7-0**	**43 STEARNS RD**

TRANSFER HISTORY	DOS	T	SALE PRICE	BK-PG (Cert)
DESIMONE MICHAEL & NICOLE	10/14/2021	QS	900,000	55844-280
CAPLINGER MICHAEL J & STA	09/04/2015	QS	565,000	46014-59
HANLON FRANK R & MARY T	01/01/1965	QS		3133-441

CLASS	CLASS%	DESCRIPTION	BN ID	BN	CARD
1010	**100**	**SINGLE FAMILY**		**1**	**1 of 1**

PMT NO	PMT DT	TY	DESC	AMOUNT	INSP	BY	1st	%
		3	ALTERATIONS		08/04/2022	JD	100	100
08-055	02/04/2008	3	ALTERATIONS	26,889	08/04/2008	SJ	100	100

LAND

CD	T	AC/SF/UN	Ngh		Infl1		Infl2		ADJ BASE	SAF	Infl3		Lpi		VC	CREDIT AMT	ADJ VALUE
100	S	40,000	WS	1.00	100	1.00	100	1.00	440,000	1.00	100	1.00	R04	1.00			404,040
300	A	0.026	WS	1.00	100	1.00	100	1.00	19,800	1.00	100	1.00	R04	1.00			510

TOTAL	41,150 SF	ZONING		FRNT	112
Ngh	W. SCITUATE	NOTE			
Infl1	FACTOR 100				
Infl2	PHY 100				

ASSESSED	CURRENT	PREVIOUS
LAND	404,600	367,800
BUILDING	488,600	458,000
DETACHED	1,300	1,200
OTHER	0	0
TOTAL	**894,500**	**827,000**

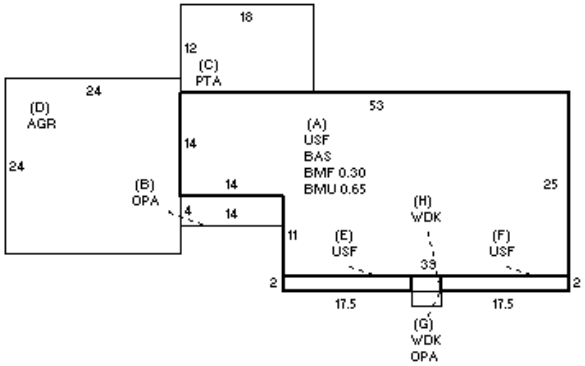

DETACHED

TY	QUAL		COND		DIM/NOTE	YB	UNITS	ADJ PRICE	RCNLD
SHF	A	1.00	20	0.80	8 X 14		112	14.21	1,300

PHOTO 08/04/2022

BLDG COMMENTS

MLS

BUILDING

BUILDING	CD	ADJ	DESC
MODEL	1		RESIDENTIAL
STYLE	5	1.00	COLONIAL [100%]
QUALITY	+	1.10	AVG +/GOOD - [100%]
FRAME	1	1.00	WOOD FRAME [100%]

MEASURE	8/4/2022	JD
LIST	8/4/2022	EST
REVIEW	3/7/2011	KT

YEAR BLT	1964	SIZE ADJ	1.000
NET AREA	2,412	DETAIL ADJ	1.000
$NLA(RCN)	$256	OVERALL	1.000

CAPACITY	UNITS	ADJ
STORIES	2	1.00
ROOMS	9	1.00
BEDROOMS	4	1.00
BATHROOMS	2	1.00
# 1/2 BATHS	1	1.00
TOT FIXTURES	8	$7,040
# UNITS	1	1.00

ELEMENT	CD	DESCRIPTION	ADJ
FOUNDATION	4	CONT BSMT WALL	1.00
EXT COVER	1	WD SHINGLES	1.00
ROOF SHAPE	1	GABLE	1.00
ROOF COVER	1	ASPH SHINGLES	1.00
FLOOR COVER	24	COMB	1.00
INT FINISH	1	PLASTER	1.00
HEATING/COOLING	1	FORCED AIR	1.00
FUEL SOURCE	2	GAS	1.00

S	BAT	T	DESCRIPTION	UNITS	YB	ADJ PRICE	RCN
A	BMU	N	BSMT UNFINISHED	761		50.38	38,343
A	BMF	N	BSMT FINISH-SEP	351		70.73	24,827
A	BAS	L	BASE AREA	1,171	1964	214.72	251,438
+	OPA	N	OPEN PORCH	64		56.65	3,626
C	PTA	N	PATIO	216		16.39	3,540
D	AGR	N	ATT GARAGE	576		46.91	27,019
+	USF	L	UPPER STORY FIN	1,241	1964	195.27	242,325
+	WDK	N	WOOD DECK	16		42.21	675
	F21	O	FPL 2S 1OP	2		9,062.35	18,125
	ODS	O	OUT DOOR SHOWER	1		1,476.20	1,476

TOTAL RCN	618,433

CONDITION ELEM	CD
EXTERIOR	G
INTERIOR	G
KITCHEN	V
BATHS	G
HEAT	A
ELECT	U

EFF.YR/AGE	2000 / 22	
COND	20	20 %
FUNC	0	
ECON	0	
DEPR	21	% GD 79
RCNLD		$488,600