Key: 2882

Town of SCITUATE - Fiscal Year 2024

10/18/2023 5:31 pm SEQ #: 2,788

LEGAL

CURRENT OWNER	PARCEL ID	LOCATION
FOLEY HANNAH CHAPIN TR 36 ELY AV SCITUATE, MA 02066	22-12-3-0	36 ELY AV

TRANSFER HISTORY	DOS	T	SALE PRICE	BK-PG (Cert)
FOLEY HANNAH CHAPIN TR	12/01/2022	QS	1,675,000	57471-279
WALLS MICHAEL J & PATRICI	08/09/2012	V	100,000	41773-253
O'DAY SCOTT R & ELIZABETH	03/09/2012	V	100,000	41078-277

CLASS	CLASS%	DESCRIPTION	BN ID	BN	CARD
1010	100	SINGLE FAMILY		1	1 of 1

PMT NO	PMT DT	TY	DESC	AMOUNT	INSP	BY	1st	%
22-0163	02/16/2022	3	ALTERATIONS	24,500	06/22/2022	JD	100	100
19-124	02/26/2019	1	NEW CONST	424,000	04/29/2019	JD	100	5
19-124	02/26/2019	1	NEW CONST	424,000	03/09/2020	JD	100	100

LAND

CD	T	AC/SF/UN	Ngh	Infl1	Infl2	ADJ BASE	SAF	Infl3	Lpi	VC	CREDIT AMT	ADJ VALUE
100	S	11,413	NS 1.00	100 1.00	100 1.00	748,000	3.16	85 0.85	WV5 2.00			618,570

TOTAL	11,413 SF	ZONING		FRNT	428
Ngh	NO. SCITUATE	NOTE	INF.3=SHAPE		
Infl1	FACTOR 100				
Infl2	PHY 100				

ASSESSED	CURRENT	PREVIOUS
LAND	618,600	661,600
BUILDING	987,600	822,600
DETACHED	0	0
OTHER	0	0
TOTAL	**1,606,200**	**1,484,200**

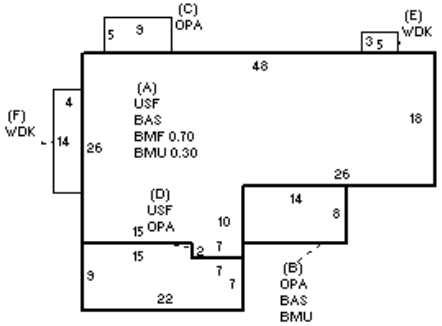

DETACHED

TY	QUAL	COND	DIM/NOTE	YB	UNITS	ADJ PRICE	RCNLD

PHOTO 07/11/2023

BUILDING

BUILDING	CD	ADJ	DESC
MODEL	1		RESIDENTIAL
STYLE	20	1.35	NEW STYLE [100%]
QUALITY	V	1.40	VERY GOOD [100%]
FRAME	1	1.00	WOOD FRAME [100%]

MEASURE	3/9/2020	JD
LIST	3/9/2020	JD
REVIEW	7/11/2023	JD

BLDG COMMENTS

MLS

YEAR BLT	2019	SIZE ADJ	1.000
NET AREA	2,404	DETAIL ADJ	1.390
$NLA(RCN)	$424	OVERALL	1.000

CAPACITY	UNITS	ADJ
STORIES	2.5	1.00
ROOMS	6	1.00
BEDROOMS	3	1.00
BATHROOMS	2	1.00
# 1/2 BATHS	2	1.00
TOT FIXTURES	12	$18,682
# UNITS	1	1.00

ELEMENT	CD	DESCRIPTION	ADJ
FOUNDATION	4	CONT BSMT WALL	1.00
EXT COVER	2	CLAPBOARD	1.00
ROOF SHAPE	1	GABLE	1.00
ROOF COVER	1	ASPH SHINGLES	1.00
FLOOR COVER	1	HARDWOOD	1.00
INT FINISH	2	DRYWALL	1.00
HEATING/COOLING	9	WARM/COOL AIR	1.03
FUEL SOURCE	2	GAS	1.00

S	BAT	T	DESCRIPTION	UNITS	YB	ADJ PRICE	RCN
+	BMU	N	BSMT UNFINISHED	428		63.30	27,093
A	BMF	N	BSMT FINISH-SEP	738		88.86	65,580
+	BAS	L	BASE AREA	1,166	2019	379.86	442,918
+	USF	L	UPPER STORY FIN	1,238	2019	345.44	427,658
+	OPA	N	OPEN PORCH	341		72.10	24,587
+	WDK	N	WOOD DECK	71		53.75	3,816
	GFP	O	GAS FIREPLACE	1		7,778.40	7,778

TOTAL RCN 1,018,112

CONDITION ELEM	CD
EXTERIOR	A
INTERIOR	A
KITCHEN	A
BATHS	A
HEAT	A
ELECT	A

EFF.YR/AGE 2019 / 3

COND	3 3 %		
FUNC	0		
ECON	0		
DEPR	3	% GD	97

RCNLD $987,600