Key: 3002

Town of SCITUATE - Fiscal Year 2024

10/18/2023 5:31 pm SEQ #: 2,910

LEGAL

CURRENT OWNER	PARCEL ID	LOCATION
GRANATINO JEFFREY W & KAREN M 27 SEDGEWICK DR SCITUATE, MA 02066	14-4-13-0	27 SEDGEWICK DR

TRANSFER HISTORY	DOS	T	SALE PRICE	BK-PG (Cert)
GRANATINO JEFFREY W & KAR	03/31/2006	QS	658,000	32442-314
JOHNSTON WM C & TRACY E	09/28/1999	QS	325,000	17901-155
STONE CHESTER & KATHLEEN	01/01/1979	XX		4536-477

CLASS	CLASS%	DESCRIPTION	BN ID	BN	CARD
1010	100	SINGLE FAMILY		1	1 of 1

PMT NO	PMT DT	TY	DESC	AMOUNT	INSP	BY	1st	%
21-430	04/22/2021	3	ALTERATIONS	6,500	06/22/2021	JD	100	100
08-220	06/01/2008	3	ALTERATIONS	11,000	06/17/2009	SJ	100	100
91-237	06/10/1991	3	ALTERATIONS				100	100
		7	OTHERS				100	100

LAND

CD	T	AC/SF/UN	Ngh	Infl1	Infl2	ADJ BASE	SAF	Infl3	Lpi	VC	CREDIT AMT	ADJ VALUE
100	S	22,146	NS 1.00	100 1.00	100 1.00	440,000	1.70	100 1.00	R04 1.00			380,820

TOTAL	22,146 SF	ZONING		FRNT	109
Ngh	NO. SCITUATE	NOTE	. . . .		
Infl1	FACTOR 100				
Infl2	PHY 100				

ASSESSED	CURRENT	PREVIOUS
LAND	380,800	346,200
BUILDING	496,900	460,500
DETACHED	0	0
OTHER	0	0
TOTAL	**877,700**	**806,700**

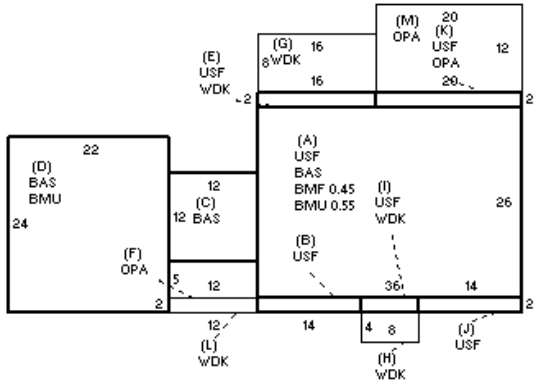

DETACHED

TY	QUAL	COND	DIM/NOTE	YB	UNITS	ADJ PRICE	RCNLD

PHOTO 06/17/2021

BLDG COMMENTS

BUILDING

BUILDING	CD	ADJ	DESC
MODEL	1		RESIDENTIAL
STYLE	5	1.00	COLONIAL [100%]
QUALITY	+	1.10	AVG +/GOOD - [100%]
FRAME	1	1.00	WOOD FRAME [100%]

MEASURE	6/22/2021	JD
LIST	6/22/2021	EST
REVIEW	4/1/2011	KT

YEAR BLT	1961	SIZE ADJ	1.000
NET AREA	2,688	DETAIL ADJ	1.020
$NLA(RCN)	$257	OVERALL	1.000

CAPACITY	UNITS	ADJ
STORIES	2	1.00
ROOMS	10	1.00
BEDROOMS	4	1.00
BATHROOMS	3	1.00
# 1/2 BATHS	1	1.00
TOT FIXTURES	11	$9,874
# UNITS	1	1.00

ELEMENT	CD	DESCRIPTION	ADJ
FOUNDATION	4	CONT BSMT WALL	1.00
EXT COVER	1	WD SHINGLES	1.00
ROOF SHAPE	1	GABLE	1.00
ROOF COVER	1	ASPH SHINGLES	1.00
FLOOR COVER	24	COMB	1.00
INT FINISH	1	PLASTER	1.00
HEATING/COOLING	2	HOT WATER	1.02
FUEL SOURCE	2	GAS	1.00

S	BAT	T	DESCRIPTION	UNITS	YB	ADJ PRICE	RCN
+	BMU	N	BSMT UNFINISHED	1,043		47.19	49,220
A	BMF	N	BSMT FINISH-SEP	421		66.25	27,889
+	USF	L	UPPER STORY FIN	1,080	1961	195.94	211,620
+	BAS	L	BASE AREA	1,608	1961	215.47	346,471
+	WDK	N	WOOD DECK	232		42.24	9,800
+	OPA	N	OPEN PORCH	340		56.65	19,261
	BMG	O	BSMT GARAGE	2		2,740.10	5,480
	F21	O	FPL 2S 1OP	1		9,062.90	9,063
	ODS	O	OUT DOOR SHOWER	1		1,505.90	1,506

TOTAL RCN	690,184

CONDITION ELEM	CD
EXTERIOR	G
INTERIOR	G
KITCHEN	G
BATHS	G
HEAT	A
ELECT	A

EFF.YR/AGE	1977 / 45		
COND	28	28 %	
FUNC	0		
ECON	0		
DEPR	28	% GD	72
RCNLD			$496,900