Key: 3511

Town of SCITUATE - Fiscal Year 2024

10/18/2023 5:31 pm SEQ #: 3,370

LEGAL

CURRENT OWNER	PARCEL ID	LOCATION
SIGSWORTH JOSHUA CHARLES & ANNA JOY 7 EDITH HOLMES DR SCITUATE, MA 02066	34-31-1-0	7 EDITH HOLMES DR

TRANSFER HISTORY	DOS	T	SALE PRICE	BK-PG (Cert)
SIGSWORTH JOSHUA CHARLES	03/29/2021	QS	745,000	54676-349
DESMOND JANICE M	08/21/1995	F	-100	13772-295
DESMOND WILLIAM & JANICE	01/01/1979	XX		4498-234

CLASS	CLASS%	DESCRIPTION	BN ID	BN	CARD
1010	100	SINGLE FAMILY		1	1 of 1

PMT NO	PMT DT	TY	DESC	AMOUNT	INSP	BY	1st	%
		7	OTHERS		03/05/2020	JD	100	100
13-540	08/12/2013	3	ALTERATIONS	3,000	07/10/2014	MR	100	100
05-279		2	ADDITIONS	23,000	09/02/2008	SJ	0	100
98-192	05/11/1998	3	ALTERATIONS				100	100
95-597	10/01/1995	3	ALTERATIONS				100	100

LAND

CD	T	AC/SF/UN	Ngh	Infl1	Infl2	ADJ BASE	SAF	Infl3	Lpi	VC	CREDIT AMT	ADJ VALUE
100	S	20,400	SC 1.00	100 1.00	100 1.00	396,000	1.84	100 1.00	R04 0.90			340,490

TOTAL	20,400 SF	ZONING		FRNT	297
Ngh	SCITUATE	NOTE			
Infl1	FACTOR 100				
Infl2	PHY 100				

ASSESSED	CURRENT	PREVIOUS
LAND	340,500	326,700
BUILDING	311,400	287,900
DETACHED	0	0
OTHER	0	0
TOTAL	**651,900**	**614,600**

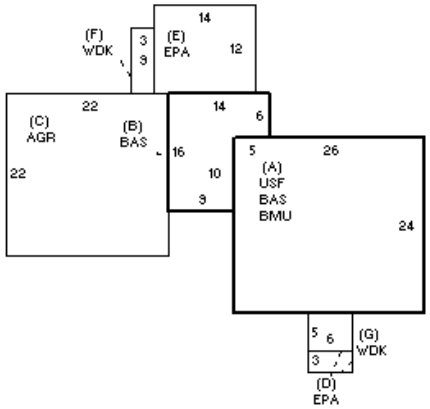

DETACHED

TY	QUAL	COND	DIM/NOTE	YB	UNITS	ADJ PRICE	RCNLD

PHOTO 07/07/2022

BUILDING

BUILDING	CD	ADJ	DESC
MODEL	1		RESIDENTIAL
STYLE	5	1.00	COLONIAL [100%]
QUALITY	+	1.10	AVG +/GOOD - [100%]
FRAME	1	1.00	WOOD FRAME [100%]

MEASURE	7/7/2022	JD
LIST	7/7/2022	EST
REVIEW	3/5/2021	JD

BLDG COMMENTS

FY22 QUALITY A TO PLUS
MLS

YEAR BLT	1935	SIZE ADJ	1.000
NET AREA	1,422	DETAIL ADJ	1.030
$NLA(RCN)	$304	OVERALL	1.000

CAPACITY	UNITS	ADJ
STORIES	2	1.00
ROOMS	6	1.00
BEDROOMS	3	1.00
BATHROOMS	2	1.00
# 1/2 BATHS	0	1.00
TOT FIXTURES	6	$5,438
# UNITS	1	1.00

ELEMENT	CD	DESCRIPTION	ADJ
FOUNDATION	4	CONT BSMT WALL	1.00
EXT COVER	1	WD SHINGLES	1.00
ROOF SHAPE	1	GABLE	1.00
ROOF COVER	1	ASPH SHINGLES	1.00
FLOOR COVER	2	SOFTWOOD	1.00
INT FINISH	1	PLASTER	1.00
HEATING/COOLING	9	WARM/COOL AIR	1.03
FUEL SOURCE	2	GAS	1.00

S	BAT	T	DESCRIPTION	UNITS	YB	ADJ PRICE	RCN
A	BMU	N	BSMT UNFINISHED	624		60.80	37,942
A	USF	L	UPPER STORY FIN	624	1935	223.28	139,325
+	BAS	L	BASE AREA	798	1935	245.52	195,928
C	AGR	N	ATT GARAGE	484		48.90	23,667
+	EPA	N	ENCLOSED PORCH	198		99.22	19,646
+	WDK	N	WOOD DECK	45		42.24	1,901
	FPL	O	FIREPLACE	1		8,594.30	8,594

TOTAL RCN	432,441

CONDITION ELEM	CD
EXTERIOR	G
INTERIOR	G
KITCHEN	G
BATHS	G
HEAT	A
ELECT	A

EFF.YR/AGE	1977 / 45	
COND	28	28 %
FUNC	0	
ECON	0	
DEPR	28	% GD 72
RCNLD		$311,400