Key: 4018

Town of SCITUATE - Fiscal Year 2024

10/18/2023 5:31 pm SEQ #: 3,836

LEGAL

CURRENT OWNER	PARCEL ID	LOCATION
HARRISON JOAN M 257 GREEN ST NORTHBOROUGH, MA 01532	38-5-26-0	31 JAMES WAY

TRANSFER HISTORY	DOS	T	SALE PRICE	BK-PG (Cert)
HARRISON JOAN M	01/01/1958	QS		(25365)
BONGARZONE R M INC	01/01/1956	XX		110-68

CLASS	CLASS%	DESCRIPTION	BN ID	BN	CARD
1010	100	SINGLE FAMILY		1	1 of 1

PMT NO	PMT DT	TY	DESC	AMOUNT	INSP	BY	1st	%
01-294	06/20/2001	3	ALTERATIONS				100	100

LAND

CD	T	AC/SF/UN	Ngh	Infl1	Infl2	ADJ BASE	SAF	Infl3	Lpi	VC	CREDIT AMT	ADJ VALUE
100	S	16,083	SC 1.00	100 1.00	100 1.00	396,000	2.29	100 1.00	R03 0.90			334,610

TOTAL	16,083 SF	ZONING		FRNT	133
Ngh	SCITUATE	NOTE			
Infl1	FACTOR 100				
Infl2	PHY 100				

ASSESSED	CURRENT	PREVIOUS
LAND	334,600	321,100
BUILDING	311,200	292,500
DETACHED	0	0
OTHER	0	0
TOTAL	**645,800**	**613,600**

DETACHED

TY	QUAL	COND	DIM/NOTE	YB	UNITS	ADJ PRICE	RCNLD

PHOTO 10/27/2003

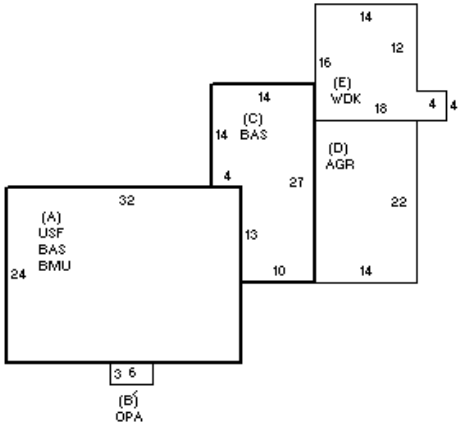

BUILDING

BUILDING	CD	ADJ	DESC
MODEL	1		RESIDENTIAL
STYLE	5	1.00	COLONIAL [100%]
QUALITY	A	1.00	AVERAGE [100%]
FRAME	1	1.00	WOOD FRAME [100%]

MEASURE	9/17/2010	PL
LIST	9/17/2010	EST
REVIEW	4/5/2011	ER

BLDG COMMENTS

FY12 FR-G TO AVE

YEAR BLT	1957	SIZE ADJ	1.000
NET AREA	1,862	DETAIL ADJ	1.020
$NLA(RCN)	$242	OVERALL	1.000

CAPACITY	UNITS	ADJ
STORIES	2	1.00
ROOMS	7	1.00
BEDROOMS	4	1.00
BATHROOMS	1	1.00
# 1/2 BATHS	1	1.00
TOT FIXTURES	5	$4,080
# UNITS	1	1.00

ELEMENT	CD	DESCRIPTION	ADJ
FOUNDATION	4	CONT BSMT WALL	1.00
EXT COVER	4	VINYL	1.00
ROOF SHAPE	1	GABLE	1.00
ROOF COVER	1	ASPH SHINGLES	1.00
FLOOR COVER	14	COMB	1.00
INT FINISH	1	PLASTER	1.00
HEATING/COOLING	2	HOT WATER	1.02
FUEL SOURCE	99	N/A	1.00

S	BAT	T	DESCRIPTION	UNITS	YB	ADJ PRICE	RCN
A	BMU	N	BSMT UNFINISHED	768		51.24	39,349
A	USF	L	UPPER STORY FIN	768	1957	189.47	145,515
B	OPA	N	OPEN PORCH	18		51.50	927
+	BAS	L	BASE AREA	1,094	1957	208.35	227,935
D	AGR	N	ATT GARAGE	308		50.98	15,702
E	WDK	N	WOOD DECK	240		38.40	9,216
	F21	O	FPL 2S 1OP	1		8,239.00	8,239

TOTAL RCN	450,963
CONDITION ELEM	CD
EXTERIOR	
INTERIOR	
KITCHEN	
BATHS	
HEAT	
ELECT	

EFF.YR/AGE	1972 / 50		
COND	31	31 %	
FUNC	0		
ECON	0		
DEPR	31	% GD	69
RCNLD			$311,200