Key: 4160

Town of SCITUATE - Fiscal Year 2024

10/18/2023 5:31 pm SEQ #: 3,977

LEGAL

CURRENT OWNER	PARCEL ID	LOCATION
DOLAN JASON T &	39-27-20-0	193 TILDEN RD
ANDREA COZZI		
193 TILDEN RD		
SCITUATE, MA 02066		

TRANSFER HISTORY	DOS	T	SALE PRICE	BK-PG (Cert)
DOLAN JASON T &	10/05/2017	QS	699,000	49017-64
HILDITCH SHAUN TR &	01/04/2017	F	1	47966-78
HILDITCH SHAUN P & MEREDI	06/28/1999	QS	220,000	17605-193

CLASS	CLASS%	DESCRIPTION	BN ID	BN	CARD
1010	100	SINGLE FAMILY		1	1 of 1

PMT NO	PMT DT	TY	DESC	AMOUNT	INSP	BY	1st	%
		7	OTHERS		08/09/2017		100	100
09-027	02/05/2009	3	ALTERATIONS	139,000	09/01/2009	SJ	100	100
		6	CYCL GROWTH				100	100

LAND

CD	T	AC/SF/UN	Ngh		Infl1		Infl2		ADJ BASE	SAF	Infl3		Lpi		VC	CREDIT AMT	ADJ VALUE
100	S	40,000	OS	1.00	100	1.00	100	1.00	440,000	1.00	100	1.00	R02	1.00			404,040
300	A	0.182	OS	1.00	100	1.00	100	1.00	19,800	1.00	100	1.00	R02	1.00			3,600

TOTAL	1.100 Acres	ZONING		FRNT	159
Ngh	OCEANSIDE	NOTE			
Infl1	FACTOR 100				
Infl2	PHY 100				

ASSESSED	CURRENT	PREVIOUS
LAND	407,600	370,800
BUILDING	707,600	629,900
DETACHED	400	300
OTHER	0	0
TOTAL	**1,115,600**	**1,001,000**

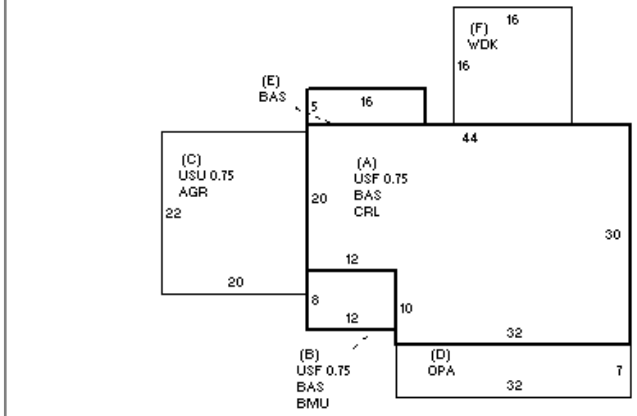

DETACHED

TY	QUAL		COND		DIM/NOTE	YB	UNITS	ADJ PRICE	RCNLD
SHF	A	1.00	30	0.70			30	17.03	400

PHOTO 09/13/2017

BLDG COMMENTS

XTRA SHOWER

BUILDING

BUILDING	CD	ADJ	DESC
MODEL	1		RESIDENTIAL
STYLE	4	1.10	CAPE [100%]
QUALITY	G	1.20	GOOD [100%]
FRAME	1	1.00	WOOD FRAME [100%]

MEASURE	7/24/2001	RD
LIST	7/24/2001	EST
REVIEW	4/4/2011	ER

YEAR BLT	1951	SIZE ADJ	1.000
NET AREA	2,348	DETAIL ADJ	1.122
$NLA(RCN)	$301	OVERALL	1.000

CAPACITY	UNITS	ADJ
STORIES	1.75	1.00
ROOMS	9	1.00
BEDROOMS	4	1.00
BATHROOMS	3	1.00
# 1/2 BATHS	1	1.00
TOT FIXTURES	10	$10,771
# UNITS	2	1.02

ELEMENT	CD	DESCRIPTION	ADJ
FOUNDATION	3	CONT WALL	1.00
EXT COVER	1	WD SHINGLES	1.00
ROOF SHAPE	1	GABLE	1.00
ROOF COVER	1	ASPH SHINGLES	1.00
FLOOR COVER	14	COMB	1.00
INT FINISH	1	PLASTER	1.00
HEATING/COOLING	1	FORCED AIR	1.00
FUEL SOURCE	99	N/A	1.00

S	BAT	T	DESCRIPTION	UNITS	YB	ADJ PRICE	RCN
A	CRL	N	BSMT CRAWL	1,200		11.81	14,172
+	USF	L	UPPER STORY FIN	972	2009	235.13	228,550
B	BMU	N	BSMT UNFINISHED	96		52.90	5,078
B	BAS	L	BASE AREA	96	2009	258.56	24,822
C	AGR	N	ATT GARAGE	440		54.72	24,077
C	USU	N	UPPER STORY UNF	330		103.64	34,202
D	OPA	N	OPEN PORCH	224		61.80	13,843
+	BAS	L	BASE AREA	1,280	1951	258.56	330,958
F	WDK	N	WOOD DECK	256		46.08	11,796
	FPL	O	FIREPLACE	1		9,375.60	9,376

TOTAL RCN	707,645

CONDITION ELEM	CD
EXTERIOR	V
INTERIOR	V
KITCHEN	V
BATHS	V
HEAT	U
ELECT	U

EFF.YR/AGE	2022 / 0	
COND	0	0 %
FUNC	0	
ECON	0	
DEPR	0	% GD 100
RCNLD		$707,600