Key: **472**

Town of SCITUATE - Fiscal Year 2024

10/18/2023 5:31 pm SEQ #: 415

LEGAL

CURRENT OWNER	PARCEL ID	LOCATION
FERRERI JOSEPH V & ELIZABETH A **34 OLD FORGE RD** **SCITUATE, MA 02066**	**36-3-9-0**	**34 OLD FORGE RD**

TRANSFER HISTORY	DOS	T	SALE PRICE	BK-PG (Cert)
FERRERI JOSEPH V & ELIZAB	07/07/2021	QS	775,000	55272-248
HOLLY JEREMIAH K & KAREN	06/28/1989	QS	246,000	9216-45
DAVIS STEWART C & VIRGINI	06/16/1983	QS	122,000	5376-428

CLASS	CLASS%	DESCRIPTION	BN ID	BN	CARD
1010	**100**	**SINGLE FAMILY**		**1**	**1 of 1**

PMT NO	PMT DT	TY	DESC	AMOUNT	INSP	BY	1st	%
		7	OTHERS		08/04/2022	JD	100	100
99-161	04/27/1999	3	ALTERATIONS				100	100

LAND

CD	T	AC/SF/UN	Ngh		Infl1		Infl2		ADJ BASE	SAF	Infl3		Lpi		VC	CREDIT AMT	ADJ VALUE
100	S	40,000	WS	1.00	100	1.00	100	1.00	440,000	1.00	100	1.00	R04	1.00			404,040
300	A	0.006	WS	1.00	100	1.00	100	1.00	19,800	1.00	100	1.00	R04	1.00			120

TOTAL	40,250 SF	ZONING		FRNT	181
Ngh	W. SCITUATE	NOTE	. . . .		
Infl1	FACTOR 100				
Infl2	PHY 100				

ASSESSED	CURRENT	PREVIOUS
LAND	404,200	367,400
BUILDING	391,200	365,700
DETACHED	0	0
OTHER	0	0
TOTAL	**795,400**	**733,100**

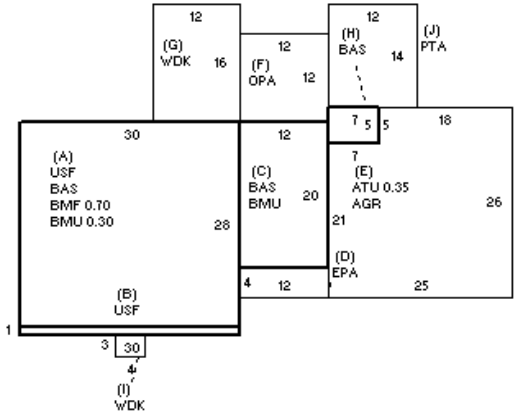

DETACHED

TY	QUAL	COND	DIM/NOTE	YB	UNITS	ADJ PRICE	RCNLD

PHOTO 08/04/2022

BUILDING

BUILDING	CD	ADJ	DESC
MODEL	1		RESIDENTIAL
STYLE	5	1.00	COLONIAL [100%]
QUALITY	A	1.00	AVERAGE [100%]
FRAME	1	1.00	WOOD FRAME [100%]

MEASURE	8/4/2022	JD
LIST	8/4/2022	EST
REVIEW	9/27/2021	JD

BLDG COMMENTS
OTHER FIX=SINK
MLS

YEAR BLT	1964	SIZE ADJ	1.000
NET AREA	1,985	DETAIL ADJ	1.000
$NLA(RCN)	$263	OVERALL	1.000

CAPACITY	UNITS	ADJ
STORIES	2	1.00
ROOMS	7	1.00
BEDROOMS	3	1.00
BATHROOMS	1	1.00
# 1/2 BATHS	1	1.00
TOT FIXTURES	6	$4,800
# UNITS	1	1.00

ELEMENT	CD	DESCRIPTION	ADJ
FOUNDATION	4	CONT BSMT WALL	1.00
EXT COVER	2	CLAPBOARD	1.00
ROOF SHAPE	1	GABLE	1.00
ROOF COVER	1	ASPH SHINGLES	1.00
FLOOR COVER	24	COMB	1.00
INT FINISH	1	PLASTER	1.00
HEATING/COOLING	1	FORCED AIR	1.00
FUEL SOURCE	2	GAS	1.00

S	BAT	T	DESCRIPTION	UNITS	YB	ADJ PRICE	RCN
+	BMU	N	BSMT UNFINISHED	492		46.14	22,702
A	BMF	N	BSMT FINISH-SEP	588		64.77	38,087
+	USF	L	UPPER STORY FIN	870	1964	183.46	159,608
D	EPA	N	ENCLOSED PORCH	48		90.21	4,330
E	AGR	N	ATT GARAGE	615		42.03	25,847
E	ATU	N	ATTIC UNF	215		37.00	7,955
F	OPA	N	OPEN PORCH	144		51.50	7,416
+	WDK	N	WOOD DECK	204		38.40	7,834
+	BAS	L	BASE AREA	1,115	1964	201.74	224,935
J	PTA	N	PATIO	168		14.90	2,503
	F11	O	FPL 1S 1OP	1		7,281.00	7,281
	F21	O	FPL 2S 1OP	1		8,239.00	8,239

TOTAL RCN	521,537

CONDITION ELEM	CD
EXTERIOR	A
INTERIOR	G
KITCHEN	G
BATHS	G
HEAT	U
ELECT	A

EFF.YR/AGE	1988 / 34		
COND	25	25 %	
FUNC	0		
ECON	0		
DEPR	25	% GD	75
RCNLD			$391,200