Key: 5029

Town of SCITUATE - Fiscal Year 2024

10/18/2023 5:31 pm SEQ #: 4,778

LEGAL

CURRENT OWNER	PARCEL ID	LOCATION
MORLEY CHRISTINE K & HUGH J TRS 11 DELTA LN SCITUATE, MA 02066	33-7-70-0	11 DELTA LN

TRANSFER HISTORY	DOS	T	SALE PRICE	BK-PG (Cert)
MORLEY CHRISTINE K &	07/01/2022	F	1	(134124)
MORLEY HUGH & CHRISTINE	01/01/1977	QS		(56009)
CAMPO JOHN A AND KATHERIN	01/01/1973	XX		(C00049765)

CLASS	CLASS%	DESCRIPTION	BN ID	BN	CARD
1010	100	SINGLE FAMILY		1	1 of 1

PMT NO	PMT DT	TY	DESC	AMOUNT	INSP	BY	1st	%
	06/01/2022	7	OTHERS		07/18/2023	JD	100	100
12-691	11/06/2012	3	ALTERATIONS	2,500	07/09/2012	SJ	100	100
08-234	06/01/2008	3	ALTERATIONS	111,554	07/09/2009	SJ	100	100

LAND

CD	T	AC/SF/UN	Ngh	Infl1	Infl2	ADJ BASE	SAF	Infl3	Lpi	VC	CREDIT AMT	ADJ VALUE
100	S	20,000	SC 1.00	100 1.00	100 1.00	396,000	1.87	100 1.00	R04 0.90			339,960

TOTAL	20,000 SF	ZONING		FRNT	117
Ngh	SCITUATE	NOTE			
Infl1	FACTOR 100				
Infl2	PHY 100				

ASSESSED	CURRENT	PREVIOUS
LAND	340,000	326,200
BUILDING	428,900	384,300
DETACHED	1,200	600
OTHER	0	0
TOTAL	**770,100**	**711,100**

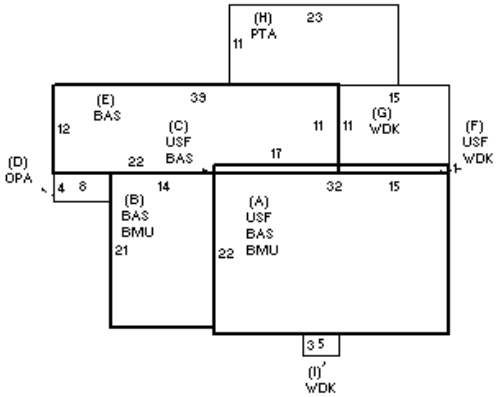

DETACHED

TY	QUAL	COND	DIM/NOTE	YB	UNITS	ADJ PRICE	RCNLD
SHF	A 1.00	30 0.70	12X10		120	13.93	1,200

PHOTO 07/18/2023

BLDG COMMENTS

BUILDING

BUILDING	CD	ADJ	DESC
MODEL	1		RESIDENTIAL
STYLE	5	1.00	COLONIAL [100%]
QUALITY	+	1.10	AVG +/GOOD - [100%]
FRAME	1	1.00	WOOD FRAME [100%]

MEASURE	7/18/2023	JD
LIST	7/18/2023	EST
REVIEW	3/29/2011	ER

YEAR BLT	1968	SIZE ADJ	1.000
NET AREA	2,202	DETAIL ADJ	1.020
$NLA(RCN)	$253	OVERALL	1.000

CAPACITY	UNITS	ADJ
STORIES	2	1.00
ROOMS	9	1.00
BEDROOMS	4	1.00
BATHROOMS	1	1.00
# 1/2 BATHS	1	1.00
TOT FIXTURES	5	$4,488
# UNITS	1	1.00

ELEMENT	CD	DESCRIPTION	ADJ
FOUNDATION	4	CONT BSMT WALL	1.00
EXT COVER	1	WD SHINGLES	1.00
ROOF SHAPE	1	GABLE	1.00
ROOF COVER	1	ASPH SHINGLES	1.00
FLOOR COVER	34	COMB	1.00
INT FINISH	1	PLASTER	1.00
HEATING/COOLING	2	HOT WATER	1.02
FUEL SOURCE	2	GAS	1.00

S	BAT	T	DESCRIPTION	UNITS	YB	ADJ PRICE	RCN
+	BMU	N	BSMT UNFINISHED	998		51.91	51,810
+	USF	L	UPPER STORY FIN	736	1968	202.18	148,806
+	BAS	L	BASE AREA	1,015	1968	222.33	225,662
D	OPA	N	OPEN PORCH	32		56.65	1,813
E	BAS	L	BASE AREA	451	2008	222.33	100,269
+	WDK	N	WOOD DECK	195		42.24	8,237
H	PTA	N	PATIO	253		16.39	4,147
	BMG	O	BSMT GARAGE	1		2,740.10	2,740
	F21	O	FPL 2S 1OP	1		9,062.90	9,063

TOTAL RCN	557,035

CONDITION ELEM	CD
EXTERIOR	A
INTERIOR	G
KITCHEN	G
BATHS	G
HEAT	A
ELECT	A

EFF.YR/AGE	1994 / 28		
COND	24	24 %	
FUNC	0		
ECON	0		
DEPR	23	% GD	77
RCNLD			$428,900