Key: 5241

Town of SCITUATE - Fiscal Year 2024

10/18/2023 5:31 pm SEQ #: 4,987

LEGAL

CURRENT OWNER	PARCEL ID	LOCATION
PLOWMAN LYNDA L & KEVIN R S/O PLOWMAN LYNDA L TR 34 BEAVER DAM RD SCITUATE, MA 02066	45-2-53-0	34 BEAVER DAM RD

TRANSFER HISTORY	DOS	T	SALE PRICE	BK-PG (Cert)
PLOWMAN LYNDA L TR	07/10/2023	F	1	58083-50
PLOWMAN LYNDA L & KEVIN R	08/11/2009	F	1	37598-259
PLOWMAN LYNDA L, TR	04/28/2006	F	-100	32593-193

CLASS	CLASS%	DESCRIPTION	BN ID	BN	CARD
1010	100	SINGLE FAMILY		1	1 of 1

PMT NO	PMT DT	TY	DESC	AMOUNT	INSP	BY	1st	%
		2	ADDITIONS		08/07/2006	SJ	95	100
03-512	08/29/2003	3	ALTERATIONS	94,200	08/12/2004	SJ	100	100
		3	ALTERATIONS			SJ	95	95

LAND

CD	T	AC/SF/UN	Ngh	Infl1	Infl2	ADJ BASE	SAF	Infl3	Lpi	VC	CREDIT AMT	ADJ VALUE
100	S	10,200	HBR 1.00	100 1.00	100 1.00	616,000	3.51	100 1.00	R02 1.40			506,220

TOTAL	10,193 SF	ZONING		FRNT	118
Ngh	HARBOR	NOTE			
Infl1	FACTOR 100				
Infl2	PHY 100				

ASSESSED	CURRENT	PREVIOUS
LAND	506,200	427,300
BUILDING	293,800	273,200
DETACHED	600	600
OTHER	0	0
TOTAL	**800,600**	**701,100**

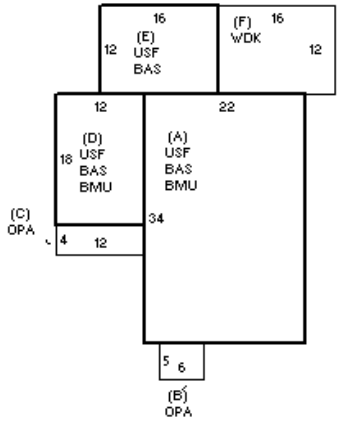

DETACHED

TY	QUAL	COND	DIM/NOTE	YB	UNITS	ADJ PRICE	RCNLD
SHF	A 1.00	30 0.70			50	17.03	600

PHOTO 12/11/2006

BLDG COMMENTS

BUILDING

BUILDING	CD	ADJ	DESC
MODEL	1		RESIDENTIAL
STYLE	7	1.20	CONVENTIONAL [100%]
QUALITY	+	1.10	AVG +/GOOD - [100%]
FRAME	1	1.00	WOOD FRAME [100%]

MEASURE	4/15/2015	SJ
LIST	4/15/2015	EST
REVIEW	3/28/2011	ER

YEAR BLT	1865	SIZE ADJ	1.000
NET AREA	2,312	DETAIL ADJ	1.236
$NLA(RCN)	$289	OVERALL	1.000

CAPACITY	UNITS	ADJ
STORIES	2	1.00
ROOMS	8	1.00
BEDROOMS	3	1.00
BATHROOMS	2	1.00
# 1/2 BATHS	0	1.00
TOT FIXTURES	6	$6,526
# UNITS	1	1.00

ELEMENT	CD	DESCRIPTION	ADJ
FOUNDATION	4	CONT BSMT WALL	1.00
EXT COVER	2	CLAPBOARD	1.00
ROOF SHAPE	1	GABLE	1.00
ROOF COVER	1	ASPH SHINGLES	1.00
FLOOR COVER	2	SOFTWOOD	1.00
INT FINISH	1	PLASTER	1.00
HEATING/COOLING	9	WARM/COOL AIR	1.03
FUEL SOURCE	99	N/A	1.00

S	BAT	T	DESCRIPTION	UNITS	YB	ADJ PRICE	RCN
+	BMU	N	BSMT UNFINISHED	964		52.42	50,536
A	BAS	L	BASE AREA	748	1865	267.11	199,802
A	USF	L	UPPER STORY FIN	748	1865	242.91	181,698
+	OPA	N	OPEN PORCH	78		56.65	4,419
+	USF	L	UPPER STORY FIN	408	2004	242.91	99,108
+	BAS	L	BASE AREA	408	2004	267.11	108,983
F	WDK	N	WOOD DECK	192		42.24	8,110
	FPL	O	FIREPLACE	1		8,594.30	8,594

TOTAL RCN	667,776
CONDITION ELEM	CD
EXTERIOR	
INTERIOR	
KITCHEN	
BATHS	
HEAT	
ELECT	

EFF.YR/AGE	1956 / 66	
COND	56	56 %
FUNC	0	
ECON	0	
DEPR	56	% GD 44
RCNLD		$293,800