Key: 528

Town of SCITUATE - Fiscal Year 2024

10/18/2023 5:31 pm SEQ #: 472

LEGAL

CURRENT OWNER	PARCEL ID	LOCATION
DRISCOLL JAMES F 19 DAEDALUS CIR SCITUATE, MA 02066	44-3-12-0	19 DAEDALUS CIR

TRANSFER HISTORY	DOS	T	SALE PRICE	BK-PG (Cert)
DRISCOLL JAMES F	09/01/2015	QS	390,000	45997-135
EVANS JOANN	06/15/2007	QS	385,000	34678-91
TEODORSON DOREEN C	07/30/1999	QS	224,000	17721-244

CLASS	CLASS%	DESCRIPTION	BN ID	BN	CARD
1010	100	SINGLE FAMILY		1	1 of 1

PMT NO	PMT DT	TY	DESC	AMOUNT	INSP	BY	1st	%
16-14	01/12/2016	2	ADDITIONS	40,500	07/21/2016	SJ	100	100
99-437	08/17/1999	3	ALTERATIONS				100	100
99-438	08/17/1999	3	ALTERATIONS				100	100

LAND

CD	T	AC/SF/UN	Ngh	Infl1	Infl2	ADJ BASE	SAF	Infl3	Lpi	VC	CREDIT AMT	ADJ VALUE
100	S	20,914	SC 1.00	100 1.00	100 1.00	396,000	1.79	100 1.00	R03 0.90			341,160

TOTAL	20,914 SF	ZONING		FRNT	265
Ngh	SCITUATE	NOTE	IN M43. . . .		
Infl1	FACTOR 100				
Infl2	PHY 100				

ASSESSED	CURRENT	PREVIOUS
LAND	341,200	327,400
BUILDING	250,100	225,400
DETACHED	0	0
OTHER	0	0
TOTAL	**591,300**	**552,800**

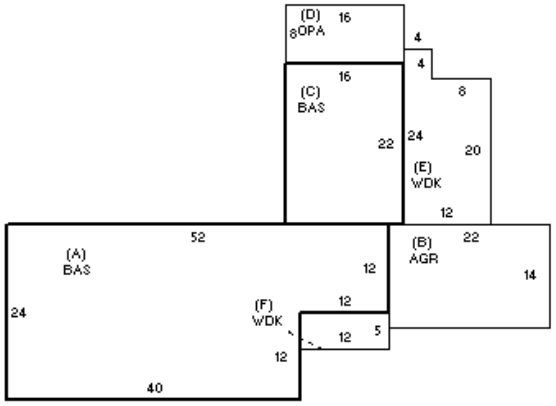

DETACHED

TY	QUAL	COND	DIM/NOTE	YB	UNITS	ADJ PRICE	RCNLD

PHOTO 09/30/2003

BLDG COMMENTS

BUILDING

BUILDING	CD	ADJ	DESC
MODEL	1		RESIDENTIAL
STYLE	1	0.85	RANCH [100%]
QUALITY	+	1.10	AVG +/GOOD - [100%]
FRAME	1	1.00	WOOD FRAME [100%]

MEASURE	3/4/2013	SJ
LIST	3/4/2013	EST
REVIEW	3/8/2011	KT

YEAR BLT	1962	SIZE ADJ	1.000
NET AREA	1,456	DETAIL ADJ	0.823
$NLA(RCN)	$229	OVERALL	1.000

CAPACITY	UNITS	ADJ
STORIES	1	1.00
ROOMS	6	1.00
BEDROOMS	2	1.00
BATHROOMS	2	1.00
# 1/2 BATHS	6	1.00
TOT FIXTURES	5	$3,621
# UNITS	1	1.00

ELEMENT	CD	DESCRIPTION	ADJ
FOUNDATION	2	SLAB	0.95
EXT COVER	1	WD SHINGLES	1.00
ROOF SHAPE	1	GABLE	1.00
ROOF COVER	1	ASPH SHINGLES	1.00
FLOOR COVER	99	N/A	1.00
INT FINISH	99	N/A	1.00
HEATING/COOLING	2	HOT WATER	1.02
FUEL SOURCE	99	N/A	1.00

S	BAT	T	DESCRIPTION	UNITS	YB	ADJ PRICE	RCN
A	BAS	L	BASE AREA	1,104	1962	195.04	215,320
B	AGR	N	ATT GARAGE	308		56.08	17,272
C	BAS	L	BASE AREA	352	2016	195.03	68,652
D	OPA	N	OPEN PORCH	128		56.65	7,251
+	WDK	N	WOOD DECK	316		42.24	13,347
	F11	O	FPL 1S 1OP	1		8,009.10	8,009

TOTAL RCN	333,473
CONDITION ELEM	CD
EXTERIOR	
INTERIOR	
KITCHEN	
BATHS	
HEAT	
ELECT	

EFF.YR/AGE	1990 / 32	
COND	25	25 %
FUNC	0	
ECON	0	
DEPR	25	% GD 75
RCNLD		$250,100