Key: 5428

Town of SCITUATE - Fiscal Year 2024

10/18/2023 5:31 pm SEQ #: 5,159

LEGAL

CURRENT OWNER	PARCEL ID	LOCATION
LEBLANC PETER L & ELIZABETH P **10 POPLAR AV** **SCITUATE, MA 02066**	**45-15-5-0**	**10 POPLAR AV**

TRANSFER HISTORY	DOS	T	SALE PRICE	BK-PG (Cert)
LEBLANC PETER L & ELIZABE	06/14/2019	QS	675,000	(105382)
LARKIN DANIEL M & CHRISTI	05/21/2004	QS	439,000	(105382)
NELSON ELIZABETH R	09/20/1985	QS		72052-

CLASS	CLASS%	DESCRIPTION	BN ID	BN	CARD
1010	**100**	**SINGLE FAMILY**		**1**	**1 of 1**

PMT NO	PMT DT	TY	DESC	AMOUNT	INSP	BY	1st	%
		6	CYCL GROWTH		05/31/2023	NC	100	100
22-0756	07/13/2022	3	ALTERATIONS	500	05/31/2023	NC	100	100
		2	ADDITIONS		08/04/2009	SJ	100	100

LAND

CD	T	AC/SF/UN	Ngh	Infl1	Infl2	ADJ BASE	SAF	Infl3	Lpi	VC	CREDIT AMT	ADJ VALUE
100	S	11,500	HBR 1.00	100 1.00	100 1.00	506,000	3.13	100 1.00	R03 1.15			418,630

TOTAL	11,500 SF	ZONING		FRNT	111
Ngh	HARBOR	NOTE			
Infl1	FACTOR 100				
Infl2	PHY 100				

ASSESSED	CURRENT	PREVIOUS
LAND	418,600	380,600
BUILDING	564,500	519,900
DETACHED	1,300	0
OTHER	0	0
TOTAL	**984,400**	**900,500**

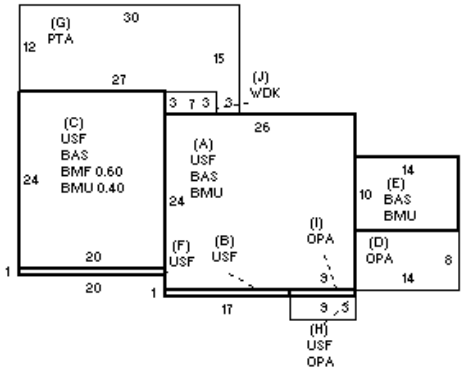

DETACHED

TY	QUAL	COND	DIM/NOTE	YB	UNITS	ADJ PRICE	RCNLD
SHF	A 1.00	10 0.90	8X12		96	14.95	1,300

PHOTO 05/31/2023

BUILDING

BUILDING	CD	ADJ	DESC
MODEL	1		RESIDENTIAL
STYLE	5	1.00	COLONIAL [100%]
QUALITY	+	1.10	AVG +/GOOD - [100%]
FRAME	1	1.00	WOOD FRAME [100%]

MEASURE	8/4/2009	SJ
LIST	8/4/2009	EST
REVIEW	6/27/2023	NC

BLDG COMMENTS

mls

YEAR BLT	1958	SIZE ADJ	1.000
NET AREA	2,394	DETAIL ADJ	1.030
$NLA(RCN)	$254	OVERALL	1.000

CAPACITY	UNITS	ADJ
STORIES	2	1.00
ROOMS	10	1.00
BEDROOMS	3	1.00
BATHROOMS	3	1.00
# 1/2 BATHS	0	1.00
TOT FIXTURES	10	$9,064
# UNITS	1	1.00

ELEMENT	CD	DESCRIPTION	ADJ
FOUNDATION	4	CONT BSMT WALL	1.00
EXT COVER	4	VINYL	1.00
ROOF SHAPE	1	GABLE	1.00
ROOF COVER	1	ASPH SHINGLES	1.00
FLOOR COVER	1	HARDWOOD	1.00
INT FINISH	1	PLASTER	1.00
HEATING/COOLING	9	WARM/COOL AIR	1.03
FUEL SOURCE	2	GAS	1.00

S	BAT	T	DESCRIPTION	UNITS	YB	ADJ PRICE	RCN
+	BMU	N	BSMT UNFINISHED	956		48.95	46,796
A	BAS	L	BASE AREA	624	1958	221.40	138,155
+	USF	L	UPPER STORY FIN	650	1958	201.34	130,871
C	BMF	N	BSMT FINISH-SEP	288		68.72	19,790
+	BAS	L	BASE AREA	620	2009	221.40	137,269
+	OPA	N	OPEN PORCH	148		56.65	8,384
+	USF	L	UPPER STORY FIN	500	2009	201.34	100,671
G	PTA	N	PATIO	369		16.39	6,048
J	WDK	N	WOOD DECK	21		42.22	887
	F21	O	FPL 2S 1OP	1		9,062.90	9,063

TOTAL RCN	606,998

CONDITION ELEM	CD
EXTERIOR	A
INTERIOR	V
KITCHEN	V
BATHS	G
HEAT	U
ELECT	U

EFF.YR/AGE	2015 / 7		
COND	7 7 %		
FUNC	0		
ECON	0		
DEPR	7	% GD	93
RCNLD	$564,500		