Key: 5493

Town of SCITUATE - Fiscal Year 2024

10/18/2023 5:31 pm SEQ #: 5,222

LEGAL

CURRENT OWNER	PARCEL ID	LOCATION
BELVIN SHANE G & CARA L 79 JERICHO RD SCITUATE, MA 02066	46-7-9-F	79 JERICHO RD

TRANSFER HISTORY	DOS	T	SALE PRICE	BK-PG (Cert)
BELVIN SHANE G & CARA L	12/02/2020	O	1,100,000	(131197)
TIBBETTS JOSEPH V & LOIS	03/01/2018	F	1	(126465)
TIBBETTS JOSEPH V & LOIS	10/23/2003	F		(104328)

CLASS	CLASS%	DESCRIPTION	BN ID	BN	CARD
1010	100	SINGLE FAMILY		1	1 of 1

PMT NO	PMT DT	TY	DESC	AMOUNT	INSP	BY	1st	%
21-97	02/21/2021	3	ALTERATIONS	275,000	10/15/2021	JD	100	100
21-97	02/08/2021	3	ALTERATIONS	275,000	05/18/2021	JD	100	60
95-247	05/12/1995	2	ADDITIONS				100	100
95-246	05/12/1995	1	NEW CONST				100	100
95-115	03/17/1995	4	DEMO				100	100

LAND

CD	T	AC/SF/UN	Ngh	Infl1	Infl2	ADJ BASE	SAF	Infl3	Lpi	VC	CREDIT AMT	ADJ VALUE
100	S	11,046	OS 1.00	100 1.00	100 1.00	880,000	3.26	100 1.00	WV6 2.00			726,380

TOTAL	11,064 SF	ZONING		FRNT	195
Ngh	OCEANSIDE	NOTE			
Infl1	FACTOR 100				
Infl2	PHY 100				

ASSESSED	CURRENT	PREVIOUS
LAND	726,400	660,400
BUILDING	1,149,900	992,700
DETACHED	32,500	30,900
OTHER	0	0
TOTAL	**1,908,800**	**1,684,000**

DETACHED

TY	QUAL	COND	DIM/NOTE	YB	UNITS	ADJ PRICE	RCNLD
GFL	G 1.20	30 0.70	20X20	1996	400	113.13	31,700
SHF	A 1.00	20 0.80	8X7		56	17.03	800

PHOTO 10/15/2021

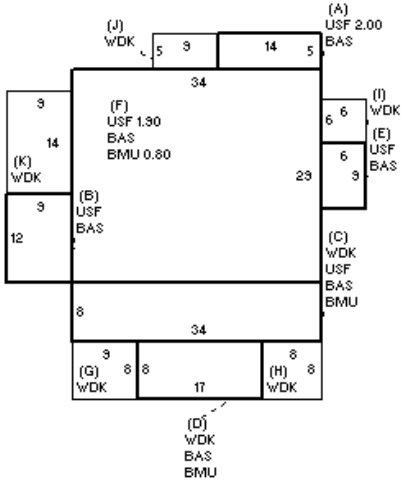

BLDG COMMENTS

BUILDING

BUILDING	CD	ADJ	DESC
MODEL	1		RESIDENTIAL
STYLE	5	1.00	COLONIAL [100%]
QUALITY	V	1.40	VERY GOOD [100%]
FRAME	1	1.00	WOOD FRAME [100%]

MEASURE	5/18/2021	JD
LIST	10/15/2021	JD
REVIEW	9/30/2020	JD

YEAR BLT	1995	SIZE ADJ	1.000
NET AREA	4,073	DETAIL ADJ	1.030
$NLA(RCN)	$282	OVERALL	1.000

CAPACITY	UNITS	ADJ
STORIES	2.9	1.00
ROOMS	10	1.00
BEDROOMS	4	1.00
BATHROOMS	4	1.00
# 1/2 BATHS	0	1.00
TOT FIXTURES	16	$18,458
# UNITS	1	1.00

ELEMENT	CD	DESCRIPTION	ADJ
FOUNDATION	4	CONT BSMT WALL	1.00
EXT COVER	2	CLAPBOARD	1.00
ROOF SHAPE	1	GABLE	1.00
ROOF COVER	1	ASPH SHINGLES	1.00
FLOOR COVER	13	COMB	1.00
INT FINISH	2	DRYWALL	1.00
HEATING/COOLING	9	WARM/COOL AIR	1.03
FUEL SOURCE	2	GAS	1.00

S	BAT	T	DESCRIPTION	UNITS	YB	ADJ PRICE	RCN
+	BAS	L	BASE AREA	1,626	1995	263.24	428,030
+	USF	L	UPPER STORY FIN	2,447	1995	239.39	585,787
+	BMU	N	BSMT UNFINISHED	1,197		62.89	75,278
+	WDK	N	WOOD DECK	751		53.76	40,373
	ODS	O	OUT DOOR SHOWER	1		1,934.80	1,935

TOTAL RCN	1,149,861

CONDITION ELEM	CD
EXTERIOR	V
INTERIOR	V
KITCHEN	V
BATHS	V
HEAT	U
ELECT	U

EFF.YR/AGE	2022 / 0		
COND	0	0 %	
FUNC	0		
ECON	0		
DEPR	0	% GD	100
RCNLD	$1,149,900		