Key: 5591

Town of SCITUATE - Fiscal Year 2024

10/18/2023 5:31 pm SEQ #: 5,320

LEGAL

CURRENT OWNER	PARCEL ID	LOCATION
BALDWIN ANDREW B & KERRY O 77 LIGHTHOUSE RD SCITUATE, MA 02066	46-4-37-0	77 LIGHTHOUSE RD

TRANSFER HISTORY	DOS	T	SALE PRICE	BK-PG (Cert)
BALDWIN ANDREW B & KERRY	06/03/2022	QS	1,300,100	56881-188
HUNTSMAN CAROLE A	10/09/2019	O	757,700	51771-208
JACOBS STEPHEN A & DEBORA	06/18/2001	QS	325,000	20027-227

CLASS	CLASS%	DESCRIPTION	BN ID	BN	CARD
1010	100	SINGLE FAMILY		1	1 of 1

PMT NO	PMT DT	TY	DESC	AMOUNT	INSP	BY	1st	%
20-281	05/26/2020	3	ALTERATIONS	75,000	07/15/2020	JD	100	20
20-281	05/26/2020	3	ALTERATIONS	75,000	04/20/2021	JD	100	100
		1	NEW CONST		06/27/2005	SJ	100	100
04-066	02/10/2004	1	NEW CONST	150,000	08/30/2004	SJ	100	100
99-575	11/17/1999	2	ADDITIONS				100	100

LAND

CD	T	AC/SF/UN	Ngh	Infl1	Infl2	ADJ BASE	SAF	Infl3	Lpi	VC	CREDIT AMT	ADJ VALUE
100	S	6,708	OS 1.00	100 1.00	100 1.00	528,000	5.23	100 1.00	WV3 1.20			424,850

TOTAL	6,708 SF	ZONING		FRNT	41
Ngh	OCEANSIDE	NOTE			
Infl1	FACTOR 100				
Infl2	PHY 100				

ASSESSED	CURRENT	PREVIOUS
LAND	424,900	386,200
BUILDING	739,300	696,600
DETACHED	400	400
OTHER	0	0
TOTAL	**1,164,600**	**1,083,200**

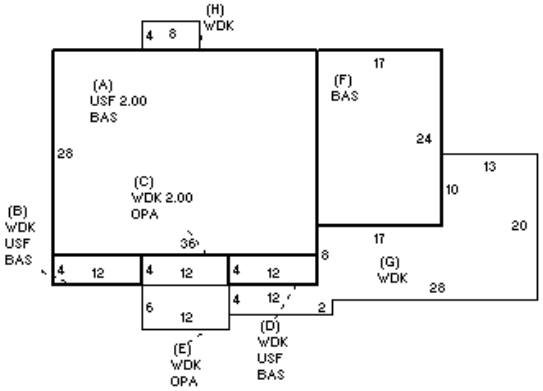

DETACHED

TY	QUAL	COND	DIM/NOTE	YB	UNITS	ADJ PRICE	RCNLD
SHF	A 1.00	30 0.70	8 X 4		32	17.03	400

PHOTO 07/15/2020

BUILDING

BUILDING	CD	ADJ	DESC
MODEL	1		RESIDENTIAL
STYLE	5	1.00	COLONIAL [100%]
QUALITY	G	1.20	GOOD [100%]
FRAME	1	1.00	WOOD FRAME [100%]

MEASURE	4/20/2021	JD
LIST	4/20/2021	EST
REVIEW	9/8/2022	JD

BLDG COMMENTS

MLS

YEAR BLT	2004	SIZE ADJ	1.000
NET AREA	3,624	DETAIL ADJ	1.030
$NLA(RCN)	$232	OVERALL	1.000

CAPACITY	UNITS	ADJ
STORIES	3	1.00
ROOMS	9	1.00
BEDROOMS	3	1.00
BATHROOMS	3	1.00
# 1/2 BATHS	1	1.00
TOT FIXTURES	11	$10,877
# UNITS	1	1.00

ELEMENT	CD	DESCRIPTION	ADJ
FOUNDATION	3	CONT WALL	1.00
EXT COVER	4	VINYL	1.00
ROOF SHAPE	1	GABLE	1.00
ROOF COVER	1	ASPH SHINGLES	1.00
FLOOR COVER	13	COMB	1.00
INT FINISH	2	DRYWALL	1.00
HEATING/COOLING	9	WARM/COOL AIR	1.03
FUEL SOURCE	2	GAS	1.00

S	BAT	T	DESCRIPTION	UNITS	YB	ADJ PRICE	RCN
+	BAS	L	BASE AREA	1,512	2004	228.50	345,494
+	USF	L	UPPER STORY FIN	2,112	2004	207.80	438,868
+	OPA	N	OPEN PORCH	120		61.80	7,416
+	WDK	N	WOOD DECK	778		46.08	35,850
	ODS	O	OUT DOOR SHOWER	1		1,658.40	1,658

TOTAL RCN	840,163

CONDITION ELEM	CD
EXTERIOR	A
INTERIOR	G
KITCHEN	G
BATHS	G
HEAT	A
ELECT	A

EFF.YR/AGE	2010 / 12		
COND	12	12 %	
FUNC	0		
ECON	0		
DEPR	12	% GD	88
RCNLD			$739,300