Key: 6003

Town of SCITUATE - Fiscal Year 2024

10/18/2023 5:31 pm SEQ #: 5,707

LEGAL

CURRENT OWNER	PARCEL ID	LOCATION
DEVINE NANCY TR 23 ALLEN PL UNIT 1 SCITUATE, MA 02066	50-4-5-0	23 ALLEN PL

TRANSFER HISTORY	DOS	T	SALE PRICE	BK-PG (Cert)
DEVINE NANCY TR	05/11/2015	F	100	45527-116
DEVINE NANCY	01/31/2013	O	340,000	42621-168
SOBRAN ERIC C & ROBERTA M	05/24/2002	QS	382,500	22135-121

CLASS	CLASS%	DESCRIPTION	BN ID	BN	CARD
1020	100	CONDOMINIUM		1	1 of 1

PMT NO	PMT DT	TY	DESC	AMOUNT	INSP	BY	1st	%
		1	NEW CONST		05/06/2015	SJ	100	100
14-020	01/21/2014	1	NEW CONST	449,000	09/25/2014	RJM	100	90
13-214	04/18/2013	4	DEMO		06/10/2013	SJ	100	100
		7	OTHERS				100	100

LAND

CD	T	AC/SF/UN	Ngh	Infl1	Infl2	ADJ BASE	SAF	Infl3	Lpi	VC	CREDIT AMT	ADJ VALUE

TOTAL	SF	ZONING		FRNT	72
Ngh		NOTE			
Infl1					
Infl2					

ASSESSED	CURRENT	PREVIOUS
LAND	0	0
BUILDING	854,100	788,600
DETACHED	0	0
OTHER	0	0
TOTAL	**854,100**	**788,600**

DETACHED

TY	QUAL	COND	DIM/NOTE	YB	UNITS	ADJ PRICE	RCNLD

PHOTO 05/08/2023

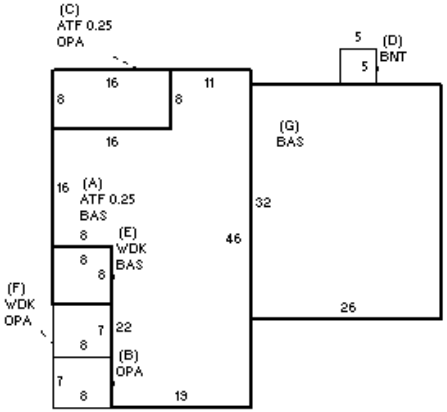

BUILDING

BUILDING	CD	ADJ	DESC
MODEL	10		CONDO
STYLE	1	1.00	CONDO [100%]
QUALITY	G	1.25	GOOD [100%]
FRAME	1	1.00	WOOD FRAME [100%]

MEASURE	5/8/2023	NC
LIST	5/8/2023	EST
REVIEW	6/16/2023	MR

BLDG COMMENTS

EXCLUSIVE USE OF ELEVATOR.... UNIT 1
GENERATOR

YEAR BLT	2014	SIZE ADJ	1.000
NET AREA	2,101	DETAIL ADJ	1.683
$NLA(RCN)	$415	OVERALL	1.000

CAPACITY	UNITS	ADJ
ROOMS	5	1.00
BEDROOMS	2	1.00
BATHROOMS	2	1.00
# 1/2 BATHS	0	1.00
TOT FIXTURES	6	$8,078

ELEMENT	CD	DESCRIPTION	ADJ
COMPLEX	91	ALLEN PLACE	1.65
STYLE	22	DUPLEX	1.00
VIEW/LOC	3	AVERAGE WV	1.00
HVAC	9	WARM/COOL AIR	1.02
FUEL SOURCE	2	GAS	1.00
FLOOR LEVEL	23	BOTH 2 & 3	1.00
CONDO MODEL	0		1.00
INT QUALITY	0		1.00

S	BAT	T	DESCRIPTION	UNITS	YB	ADJ PRICE	RCN
+	BAS	L	BAS AREA	1,834	2014	418.33	767,219
+	ATF	L	FINISHED ATTIC	267	2014	297.32	79,385
+	OPA	N	OPEN PORCH	240		30.50	7,320
D	BNT	N	BSMT ENTRY	25		11.75	294
+	WDK	N	ATT WOOD DECK	120		23.75	2,850
	BMG	O	BSMT GARAGE	1		2,825.00	2,825
	GFP	O	GAS FIREPLACE	1		3,530.00	3,530

TOTAL RCN	871,501

CONDITION ELEM	CD
INTERIOR	A
KITCHEN	A
BATHS	A
EXTERIOR	A

EFF.YR/AGE	2014 / 8		
COND	2	2 %	
FUNC	0		
ECON	0		
DEPR	2	% GD	98
RCNLD			$854,100