Key: 6517

Town of SCITUATE - Fiscal Year 2024

10/18/2023 5:31 pm SEQ #: 6,218

LEGAL

CURRENT OWNER	PARCEL ID	LOCATION
58 CRESCENT AVENUE LLC **58 CRESCENT AV** **SCITUATE, MA 02066**	**56-5-9-0**	**58 CRESCENT AV**

TRANSFER HISTORY	DOS	T	SALE PRICE	BK-PG (Cert)
58 CRESCENT AVENUE LLC	02/08/2018	F	1	(126386)
58 CRESCENT AVENUE LLC	02/08/2018	O	2,915,000	49487-1
ORLANDI THOMAS V TR &	02/01/2018	H	1	(126385)

CLASS	CLASS%	DESCRIPTION	BN ID	BN	CARD
1010	100	SINGLE FAMILY		1	1 of 1

PMT NO	PMT DT	TY	DESC	AMOUNT	INSP	BY	1st	%
43118B	09/09/2022	5	SPLIT/SUB/LA		03/07/2023	JD	100	100
18-717	10/15/2018	2	ADDITIONS	75,000	06/03/2019	TCK	100	50
18-717	10/15/2018	2	ADDITIONS	75,000	08/03/2020	JD	100	100
18-717	10/15/2018	1	NEW CONST	470,000	08/03/2020	JD	100	100
18-690	10/05/2018	1	NEW CONST	470,000	06/03/2019	TCK	100	70

LAND

CD	T	AC/SF/UN	Ngh	Infl1	Infl2	ADJ BASE	SAF	Infl3	Lpi	VC	CREDIT AMT	ADJ VALUE
100	S	19,884	CLF 1.00	100 1.00	100 1.00	2,288,000	1.88	100 1.00	WF5 5.20			1,963,390

TOTAL	19,884 SF	ZONING		FRNT	231
Ngh	CLIFFS	NOTE	Parent of 56-5-9-A		
Infl1	FACTOR 100				
Infl2	PHY 100				

ASSESSED	CURRENT	PREVIOUS
LAND	1,963,400	2,019,100
BUILDING	2,587,900	2,196,800
DETACHED	48,300	46,000
OTHER	0	0
TOTAL	**4,599,600**	**4,261,900**

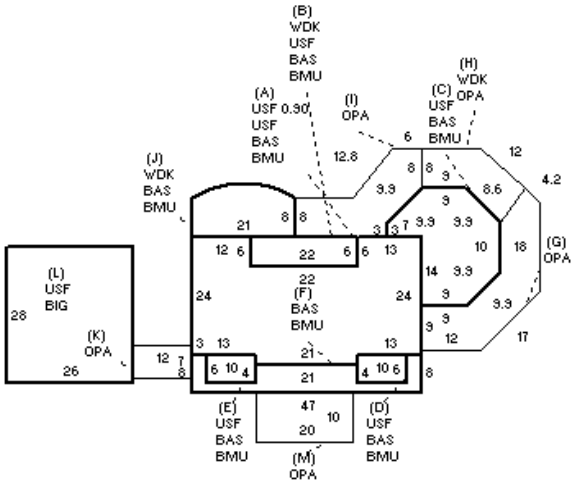

DETACHED

TY	QUAL	COND	DIM/NOTE	YB	UNITS	ADJ PRICE	RCNLD
SHF	G 1.20	10 0.90			130	16.32	1,900
IPG	V 1.50	10 0.90	UC 20X38	2019	760	51.41	35,200
PLH	V 1.50	10 0.90	6X16	2018	96	54.36	4,700
OPA	V 1.50	10 0.90	ATTD PLH 10X	2018	160	45.47	6,500

PHOTO 08/03/2020

BLDG COMMENTS

BUILDING

BUILDING	CD	ADJ	DESC
MODEL	1		RESIDENTIAL
STYLE	20	1.35	NEW STYLE [100%]
QUALITY	E	1.80	EXCELLENT [100%]
FRAME	1	1.00	WOOD FRAME [100%]

MEASURE	6/3/2019	TCK
LIST	6/3/2019	TCK
REVIEW	8/3/2020	JD

YEAR BLT	2018	SIZE ADJ	1.000
NET AREA	5,429	DETAIL ADJ	1.390
$NLA(RCN)	$497	OVERALL	1.000

CAPACITY	UNITS	ADJ
STORIES	3	1.00
ROOMS	7	1.00
BEDROOMS	3	1.00
BATHROOMS	3	1.00
# 1/2 BATHS	1	1.00
TOT FIXTURES	14	$28,022
# UNITS	1	1.00

ELEMENT	CD	DESCRIPTION	ADJ
FOUNDATION	4	CONT BSMT WALL	1.00
EXT COVER	1	WD SHINGLES	1.00
ROOF SHAPE	3	GAMBREL	1.00
ROOF COVER	1	ASPH SHINGLES	1.00
FLOOR COVER	1	HARDWOOD	1.00
INT FINISH	2	DRYWALL	1.00
HEATING/COOLING	9	WARM/COOL AIR	1.03
FUEL SOURCE	2	GAS	1.00

S	BAT	T	DESCRIPTION	UNITS	YB	ADJ PRICE	RCN
+	BMU	N	BSMT UNFINISHED	2,096		72.22	151,369
+	BAS	L	BASE AREA	2,096	2018	445.67	934,126
+	USF	L	UPPER STORY FIN	3,333	2018	405.29	1,350,832
+	WDK	N	WOOD DECK	517		69.12	35,735
+	OPA	N	OPEN PORCH	1,060		92.70	98,262
L	BIG	N	BUILT-IN GARAGE	728		101.73	74,061
	GEN	O	GENERATOR	1		0.00	
	GFP	O	GAS FIREPLACE	2		10,001.70	20,003
	ODS	O	OUT DOOR SHOWER	1		3,357.00	3,357

TOTAL RCN	2,695,768

CONDITION ELEM	CD
EXTERIOR	A
INTERIOR	A
KITCHEN	A
BATHS	A
HEAT	A
ELECT	A

EFF.YR/AGE	2018 / 4		
COND	4	4 %	
FUNC	0		
ECON	0		
DEPR	4	% GD	96
RCNLD			$2,587,900