Key: 6588

Town of SCITUATE - Fiscal Year 2024

10/18/2023 5:31 pm SEQ #: 6,292

LEGAL

CURRENT OWNER	PARCEL ID	LOCATION
LYONS RICHARD MARK &	57-1-8-0	74 NEAL GATE ST
CONDON HEIDI AH		
74 NEAL GATE ST		
SCITUATE, MA 02066		

TRANSFER HISTORY	DOS	T	SALE PRICE	BK-PG (Cert)
LYONS RICHARD MARK &	09/14/2021	F	1	55651-177
LYONS RICHARD MARK	04/23/2018	QS	780,000	49717-288
O'BRIEN GEOFFREY & LISE	03/06/1979	QS		4623-27

CLASS	CLASS%	DESCRIPTION	BN ID	BN	CARD
1010	100	SINGLE FAMILY		1	1 of 1

PMT NO	PMT DT	TY	DESC	AMOUNT	INSP	BY	1st	%
22-0624	06/14/2022	3	ALTERATIONS	18,000	08/29/2023	JD	100	100
		2	ADDITIONS				100	100

LAND

CD	T	AC/SF/UN	Ngh		Infl1		Infl2		ADJ BASE	SAF	Infl3		Lpi		VC	CREDIT AMT	ADJ VALUE
100	S	40,000	GB	1.00	100	1.00	100	1.00	440,000	1.00	100	1.00	R04	1.00			404,040
300	A	0.662	GB	1.00	100	1.00	100	1.00	19,800	1.00	100	1.00	R04	1.00			13,110

TOTAL	1.580 Acres	ZONING		FRNT	284
Ngh	GREENBUSH	NOTE			
Infl1	FACTOR 100				
Infl2	PHY 100				

ASSESSED	CURRENT	PREVIOUS
LAND	417,200	379,900
BUILDING	753,600	685,100
DETACHED	0	0
OTHER	0	0
TOTAL	**1,170,800**	**1,065,000**

DETACHED

TY	QUAL	COND	DIM/NOTE	YB	UNITS	ADJ PRICE	RCNLD

PHOTO 08/29/2023

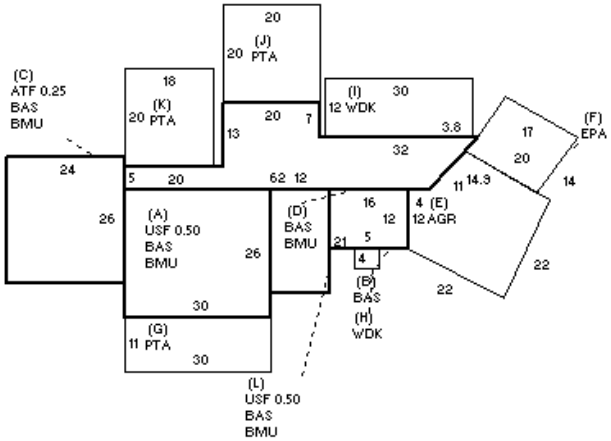

BLDG COMMENTS

BUILDING

BUILDING	CD	ADJ	DESC
MODEL	1		RESIDENTIAL
STYLE	4	1.10	CAPE [100%]
QUALITY	G	1.20	GOOD [100%]
FRAME	1	1.00	WOOD FRAME [100%]

MEASURE	8/29/2023	JD
LIST	8/29/2023	EST
REVIEW	9/12/2019	JD

YEAR BLT	1955	SIZE ADJ	1.000
NET AREA	3,277	DETAIL ADJ	1.144
$NLA(RCN)	$319	OVERALL	1.000

CAPACITY	UNITS	ADJ
STORIES	1.75	1.00
ROOMS	7	1.00
BEDROOMS	4	1.00
BATHROOMS	3	1.00
# 1/2 BATHS	0	1.00
TOT FIXTURES	9	$9,884
# UNITS	1	1.00

ELEMENT	CD	DESCRIPTION	ADJ
FOUNDATION	4	CONT BSMT WALL	1.00
EXT COVER	1	WD SHINGLES	1.00
ROOF SHAPE	1	GABLE	1.00
ROOF COVER	1	ASPH SHINGLES	1.00
FLOOR COVER	14	COMB	1.00
INT FINISH	1	PLASTER	1.00
HEATING/COOLING	11	HW/COOL AIR	1.04
FUEL SOURCE	1	OIL	1.00

S	BAT	T	DESCRIPTION	UNITS	YB	ADJ PRICE	RCN
+	BMU	N	BSMT UNFINISHED	2,413		47.14	113,737
+	USF	L	UPPER STORY FIN	516	1955	233.43	120,449
+	BAS	L	BASE AREA	2,605	1955	256.69	668,666
C	ATF	L	ATTIC FINISH	156	1955	165.85	25,872
E	AGR	N	ATT GARAGE	527		52.23	27,527
F	EPA	N	ENCLOSED PORCH	235		108.24	25,436
+	PTA	N	PATIO	1,090		17.88	19,489
+	WDK	N	WOOD DECK	380		46.08	17,510
	F11	O	FPL 1S 1OP	1		8,737.20	8,737
	FPL	O	FIREPLACE	1		9,375.60	9,376

TOTAL RCN	1,046,684
CONDITION ELEM	CD
EXTERIOR	G
INTERIOR	G
KITCHEN	G
BATHS	G
HEAT	A
ELECT	A

EFF.YR/AGE	1977 / 45	
COND	28	28 %
FUNC	0	
ECON	0	
DEPR	28	% GD 72
RCNLD		$753,600