Key: 6598

Town of SCITUATE - Fiscal Year 2024

10/18/2023 5:31 pm SEQ #: 6,302

LEGAL

CURRENT OWNER	PARCEL ID	LOCATION
AYERS TIMOTHY F & AMY T 2 CUSHING LANDING SCITUATE, MA 02066	58-1-1-B	216 C J CUSHING WAY

TRANSFER HISTORY	DOS	T	SALE PRICE	BK-PG (Cert)
AYERS TIMOTHY F & AMY T	11/15/2016	QS	645,000	47743-35
HANAFIN EDWARD & ELAINE	01/01/1979	QS		4621-172
TIBBETTS RICHARD S	01/01/1978	XX		4276-743

CLASS	CLASS%	DESCRIPTION	BN ID	BN	CARD
1010	100	SINGLE FAMILY		1	1 of 1

PMT NO	PMT DT	TY	DESC	AMOUNT	INSP	BY	1st	%

LAND

CD	T	AC/SF/UN	Ngh		Infl1		Infl2		ADJ BASE	SAF	Infl3		Lpi		VC	CREDIT AMT	ADJ VALUE
100	S	40,000	GB	1.00	100	1.00	100	1.00	528,000	1.00	100	1.00	WV1	1.20			484,850
300	A	0.182	GB	1.00	100	1.00	100	1.00	23,760	1.00	100	1.00	WV1	1.20			4,320

TOTAL	1.100 Acres	ZONING		FRNT	247
Ngh	GREENBUSH	NOTE			
Infl1	FACTOR 100				
Infl2	PHY 100				

ASSESSED	CURRENT	PREVIOUS
LAND	489,200	444,900
BUILDING	428,900	381,600
DETACHED	0	0
OTHER	0	0
TOTAL	**918,100**	**826,500**

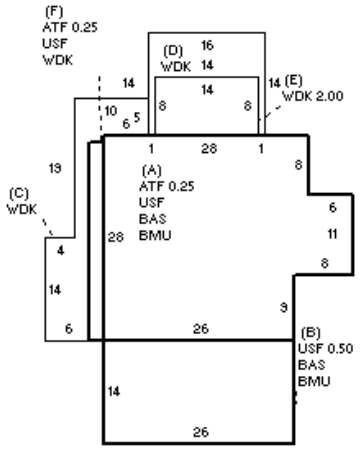

DETACHED

TY	QUAL	COND	DIM/NOTE	YB	UNITS	ADJ PRICE	RCNLD

PHOTO 11/17/2008

BLDG COMMENTS

BUILDING

BUILDING	CD	ADJ	DESC
MODEL	1		RESIDENTIAL
STYLE	8	0.90	CONTEMPORARY [100%]
QUALITY	+	1.10	AVG +/GOOD - [100%]
FRAME	1	1.00	WOOD FRAME [100%]

MEASURE	12/1/2010	PL
LIST	12/1/2010	EST
REVIEW	3/16/2011	ER

YEAR BLT	1977	SIZE ADJ	1.000
NET AREA	2,486	DETAIL ADJ	0.918
$NLA(RCN)	$224	OVERALL	1.000

CAPACITY	UNITS	ADJ
STORIES	2	1.00
ROOMS	9	1.00
BEDROOMS	4	1.00
BATHROOMS	2	1.00
# 1/2 BATHS	1	1.00
TOT FIXTURES	8	$6,463
# UNITS	1	1.00

ELEMENT	CD	DESCRIPTION	ADJ
FOUNDATION	4	CONT BSMT WALL	1.00
EXT COVER	2	CLAPBOARD	1.00
ROOF SHAPE	1	GABLE	1.00
ROOF COVER	1	ASPH SHINGLES	1.00
FLOOR COVER	14	COMB	1.00
INT FINISH	2	DRYWALL	1.00
HEATING/COOLING	2	HOT WATER	1.02
FUEL SOURCE	99	N/A	1.00

S	BAT	T	DESCRIPTION	UNITS	YB	ADJ PRICE	RCN
+	BMU	N	BSMT UNFINISHED	1,196		49.46	59,154
+	BAS	L	BASE AREA	1,196	1977	196.26	234,730
+	USF	L	UPPER STORY FIN	1,068	1977	178.48	190,616
+	ATF	L	ATTIC FINISH	222	1977	126.81	28,151
+	WDK	N	WOOD DECK	554		42.24	23,401
	BMG	O	BSMT GARAGE	2		2,740.10	5,480
	F21	O	FPL 2S 1OP	1		9,062.90	9,063

TOTAL RCN	557,058
CONDITION ELEM	CD
EXTERIOR	
INTERIOR	
KITCHEN	
BATHS	
HEAT	
ELECT	

EFF.YR/AGE	1995 / 27		
COND	23	23 %	
FUNC	0		
ECON	0		
DEPR	23	% GD	77
RCNLD			$428,900