Key: 6725

Town of SCITUATE - Fiscal Year 2024

10/18/2023 5:31 pm SEQ #: 6,421

LEGAL

CURRENT OWNER	PARCEL ID	LOCATION
FAVUZZI ROCCO A & BARBARA A **53 NORWELL AV** **SCITUATE, MA 02066**	**34-27-24-F**	**53 NORWELL AV**

TRANSFER HISTORY	DOS	T	SALE PRICE	BK-PG (Cert)
FAVUZZI ROCCO A & BARBARA	06/17/2016	QS	367,500	(123578)
GOULDING RICHARD A III &	07/31/2013	A	323,000	(119387)
GOULDING RICHARD A &	07/01/2013	QS	320,000	(119210)

CLASS	CLASS%	DESCRIPTION	BN ID	BN	CARD
1010	**100**	**SINGLE FAMILY**		**1**	**1 of 1**

PMT NO	PMT DT	TY	DESC	AMOUNT	INSP	BY	1st	%
		7	OTHERS		04/12/2023	JD	100	100
		6	CYCL GROWTH				100	100

LAND

CD	T	AC/SF/UN	Ngh	Infl1	Infl2	ADJ BASE	SAF	Infl3	Lpi	VC	CREDIT AMT	ADJ VALUE
100	S	16,031	OS 1.00	100 1.00	100 1.00	440,000	2.30	100 1.00	R03 1.00			371,710

TOTAL	16,030 SF	ZONING		FRNT	258
Ngh	OCEANSIDE	NOTE	C/W 1		
Infl1	FACTOR 100				
Infl2	PHY 100				

ASSESSED	CURRENT	PREVIOUS
LAND	371,700	337,900
BUILDING	192,100	97,200
DETACHED	0	0
OTHER	0	0
TOTAL	**563,800**	**435,100**

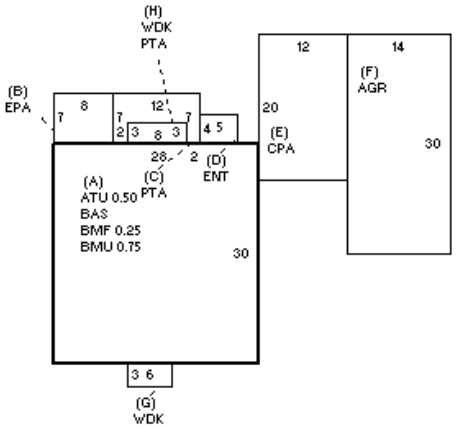

DETACHED

TY	QUAL	COND	DIM/NOTE	YB	UNITS	ADJ PRICE	RCNLD

PHOTO 04/12/2023

BLDG COMMENTS

BUILDING

BUILDING	CD	ADJ	DESC
MODEL	1		RESIDENTIAL
STYLE	4	1.10	CAPE [100%]
QUALITY	A	1.00	AVERAGE [100%]
FRAME	1	1.00	WOOD FRAME [100%]

MEASURE	4/12/2023	JD
LIST	4/12/2023	EST
REVIEW	3/15/2011	ER

YEAR BLT	1930	SIZE ADJ	1.000
NET AREA	840	DETAIL ADJ	1.122
$NLA(RCN)	$408	OVERALL	1.000

CAPACITY	UNITS	ADJ
STORIES	1.5	1.00
ROOMS	5	1.00
BEDROOMS	3	1.00
BATHROOMS	1	1.00
# 1/2 BATHS	0	1.00
TOT FIXTURES	4	$3,590
# UNITS	1	1.00

ELEMENT	CD	DESCRIPTION	ADJ
FOUNDATION	4	CONT BSMT WALL	1.00
EXT COVER	2	CLAPBOARD	1.00
ROOF SHAPE	1	GABLE	1.00
ROOF COVER	1	ASPH SHINGLES	1.00
FLOOR COVER	2	SOFTWOOD	1.00
INT FINISH	1	PLASTER	1.00
HEATING/COOLING	2	HOT WATER	1.02
FUEL SOURCE	2	GAS	1.00

S	BAT	T	DESCRIPTION	UNITS	YB	ADJ PRICE	RCN
A	BMU	N	BSMT UNFINISHED	630		49.72	31,324
A	BMF	N	BSMT FINISH-SEP	210		69.80	14,657
A	BAS	L	BASE AREA	840	1930	283.58	238,211
A	ATU	N	ATTIC UNF	420		37.00	15,540
B	EPA	N	ENCLOSED PORCH	56		90.20	5,051
+	PTA	N	PATIO	84		14.90	1,252
D	ENT	N	ENCLOSED ENTRY	20		97.70	1,954
E	CPA	N	CAR PORT	240		17.84	4,282
F	AGR	N	ATT GARAGE	420		41.41	17,392
+	WDK	N	WOOD DECK	42		38.40	1,613
	F21	O	FPL 2S 1OP	1		8,239.00	8,239

TOTAL RCN	343,105

CONDITION ELEM	CD
EXTERIOR	F
INTERIOR	F
KITCHEN	F
BATHS	F
HEAT	A
ELECT	A

EFF.YR/AGE	1963 / 59		
COND	44	44 %	
FUNC	0		
ECON	0		
DEPR	44	% GD	56
RCNLD			$192,100