Key: 704

Town of SCITUATE - Fiscal Year 2024

10/18/2023 5:31 pm SEQ #: 643

LEGAL

CURRENT OWNER	PARCEL ID	LOCATION
FARWELL MICHAEL R & JENNIFER A 38 CEDARWOOD RD SCITUATE, MA 02066	37-3-2-0	38 CEDARWOOD RD

TRANSFER HISTORY	DOS	T	SALE PRICE	BK-PG (Cert)
FARWELL MICHAEL R & JENNI	09/20/2012	QS	387,704	41971-167
ROBBINS WAYNE H	09/20/2012	A	193,852	41971-165
ROBBINS GLEN S & WAYNE H	09/20/2012	F	1	41971-163

CLASS	CLASS%	DESCRIPTION	BN ID	BN	CARD
1010	100	SINGLE FAMILY		1	1 of 1

PMT NO	PMT DT	TY	DESC	AMOUNT	INSP	BY	1st	%
23-0642	07/25/2023	4	DEMO	18,000			0	0
21-638	06/17/2021	3	ALTERATIONS	22,800	07/12/2022	JD	100	100
98-443	08/31/1998	3	ALTERATIONS				100	100

LAND

CD	T	AC/SF/UN	Ngh	Infl1	Infl2	ADJ BASE	SAF	Infl3	Lpi	VC	CREDIT AMT	ADJ VALUE
100	S	33,829	SC 1.00	100 1.00	100 1.00	396,000	1.16	100 1.00	R03 0.90			356,680

TOTAL	33,846 SF	ZONING		FRNT	392
Ngh	SCITUATE	NOTE	. . . .		
Infl1	FACTOR 100				
Infl2	PHY 100				

ASSESSED	CURRENT	PREVIOUS
LAND	356,700	342,300
BUILDING	320,900	285,400
DETACHED	700	700
OTHER	0	0
TOTAL	**678,300**	**628,400**

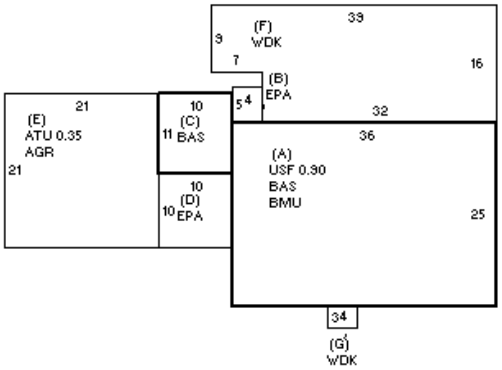

DETACHED

TY	QUAL	COND	DIM/NOTE	YB	UNITS	ADJ PRICE	RCNLD
SHF	A 1.00	30 0.70	SHED 10 X 6		60	17.03	700

PHOTO 07/12/2022

BLDG COMMENTS

BUILDING

BUILDING	CD	ADJ	DESC
MODEL	1		RESIDENTIAL
STYLE	4	1.10	CAPE [100%]
QUALITY	A	1.00	AVERAGE [100%]
FRAME	1	1.00	WOOD FRAME [100%]

MEASURE	7/12/2022	JD
LIST	7/12/2022	EST
REVIEW	3/8/2011	KT

YEAR BLT	1948	SIZE ADJ	1.000
NET AREA	1,820	DETAIL ADJ	1.122
$NLA(RCN)	$284	OVERALL	1.000

CAPACITY	UNITS	ADJ
STORIES	2	1.00
ROOMS	7	1.00
BEDROOMS	3	1.00
BATHROOMS	1	1.00
# 1/2 BATHS	1	1.00
TOT FIXTURES	5	$4,488
# UNITS	1	1.00

ELEMENT	CD	DESCRIPTION	ADJ
FOUNDATION	4	CONT BSMT WALL	1.00
EXT COVER	1	WD SHINGLES	1.00
ROOF SHAPE	1	GABLE	1.00
ROOF COVER	1	ASPH SHINGLES	1.00
FLOOR COVER	24	COMB	1.00
INT FINISH	1	PLASTER	1.00
HEATING/COOLING	2	HOT WATER	1.02
FUEL SOURCE	2	GAS	1.00

S	BAT	T	DESCRIPTION	UNITS	YB	ADJ PRICE	RCN
A	BMU	N	BSMT UNFINISHED	900		48.67	43,801
A	USF	L	UPPER STORY FIN	810	1948	209.28	169,517
+	EPA	N	ENCLOSED PORCH	120		90.20	10,824
+	BAS	L	BASE AREA	1,010	1948	230.13	232,433
E	AGR	N	ATT GARAGE	441		45.56	20,090
E	ATU	N	ATTIC UNF	154		37.00	5,698
+	WDK	N	WOOD DECK	587		38.40	22,541
	F21	O	FPL 2S 1OP	1		8,239.00	8,239

TOTAL RCN	517,631

CONDITION ELEM	CD
EXTERIOR	F
INTERIOR	A
KITCHEN	A
BATHS	A
HEAT	A
ELECT	A

EFF.YR/AGE	1967 / 55	
COND	38	38 %
FUNC	0	
ECON	0	
DEPR	38	% GD 62
RCNLD		$320,900