Key: 737

Town of SCITUATE - Fiscal Year 2024

10/18/2023 5:31 pm SEQ #: 676

LEGAL

CURRENT OWNER	PARCEL ID	LOCATION
BICKFORD JAMES J & THERESA E **4 DAEDALUS CIR** **SCITUATE, MA 02066**	**44-3-9-0**	**4 DAEDALUS CIR**

TRANSFER HISTORY	DOS	T	SALE PRICE	BK-PG (Cert)
BICKFORD JAMES J & THERES	08/03/2012	QS	447,500	41752-286
LAWRENCE CHARLES E	01/01/1970	QS		3513-364
CRESSWELL RICHARD G & DOR	01/01/1961	XX		2782-429

CLASS	CLASS%	DESCRIPTION	BN ID	BN	CARD
1010	**100**	**SINGLE FAMILY**		**1**	**1 of 1**

PMT NO	PMT DT	TY	DESC	AMOUNT	INSP	BY	1st	%
23-412	05/15/2023	2	ADDITIONS	498,600	07/26/2023	JD	65	65
12-498	08/21/2012	3	ALTERATIONS	6,250	08/05/2013	SJ	100	100
91-613	11/13/1991	2	ADDITIONS				100	100
90-706	11/16/1990	3	ALTERATIONS				100	100

LAND

CD	T	AC/SF/UN	Ngh	Infl1	Infl2	ADJ BASE	SAF	Infl3	Lpi	VC	CREDIT AMT	ADJ VALUE
100	S	22,593	SC 1.00	100 1.00	100 1.00	396,000	1.67	100 1.00	R03 0.90			343,310

TOTAL	22,593 SF	ZONING		FRNT	342
Ngh	SCITUATE	NOTE	IN M37. . . .		
Infl1	FACTOR 100				
Infl2	PHY 100				

ASSESSED	CURRENT	PREVIOUS
LAND	343,300	329,400
BUILDING	503,600	335,400
DETACHED	3,800	400
OTHER	0	0
TOTAL	**850,700**	**665,200**

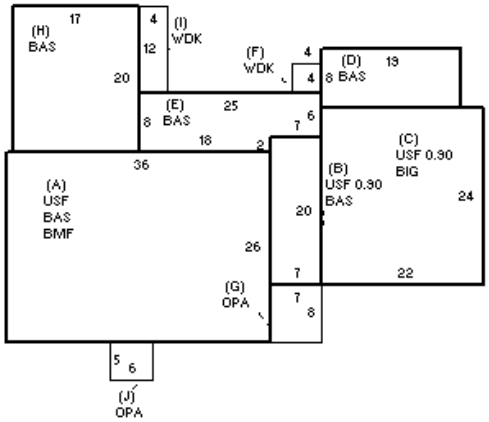

DETACHED

TY	QUAL	COND	DIM/NOTE	YB	UNITS	ADJ PRICE	RCNLD
S/V	A 1.00	SV 1.00	SHED		400	1.10	400
PTD	A 1.00	10 0.90	22X24		528	7.22	3,400

PHOTO 07/26/2023

BLDG COMMENTS

OTHER FIX=2 SINKS

BUILDING

BUILDING	CD	ADJ	DESC
MODEL	1		RESIDENTIAL
STYLE	5	1.00	COLONIAL [100%]
QUALITY	A	1.00	AVERAGE [100%]
FRAME	1	1.00	WOOD FRAME [100%]

MEASURE	7/26/2023	JD
LIST	7/26/2023	EST
REVIEW	3/8/2011	KT

YEAR BLT	1960	SIZE ADJ	1.000
NET AREA	3,291	DETAIL ADJ	1.030
$NLA(RCN)	$219	OVERALL	1.000

CAPACITY	UNITS	ADJ
STORIES	2	1.00
ROOMS	8	1.00
BEDROOMS	3	1.00
BATHROOMS	2	1.00
# 1/2 BATHS	1	1.00
TOT FIXTURES	11	$9,064
# UNITS	1	1.00

ELEMENT	CD	DESCRIPTION	ADJ
FOUNDATION	4	CONT BSMT WALL	1.00
EXT COVER	1	WD SHINGLES	1.00
ROOF SHAPE	3	GAMBREL	1.00
ROOF COVER	1	ASPH SHINGLES	1.00
FLOOR COVER	24	COMB	1.00
INT FINISH	2	DRYWALL	1.00
HEATING/COOLING	9	WARM/COOL AIR	1.03
FUEL SOURCE	2	GAS	1.00

S	BAT	T	DESCRIPTION	UNITS	YB	ADJ PRICE	RCN
A	BMF	N	BSMT FINISH-SEP	936		67.49	63,173
A	BAS	L	BASE AREA	936	1960	192.59	180,263
A	USF	L	UPPER STORY FIN	936	1960	175.14	163,930
+	BAS	L	BASE AREA	818	2023	192.59	157,538
+	USF	L	UPPER STORY FIN	601	2023	175.14	105,259
C	BIG	N	BUILT-IN GARAGE	528		44.83	23,672
+	WDK	N	WOOD DECK	64		38.41	2,458
+	OPA	N	OPEN PORCH	86		51.50	4,429
	F21	O	FPL 2S 1OP	1		8,239.00	8,239
	ODS	O	OUT DOOR SHOWER	1		1,382.00	1,382

TOTAL RCN	719,407

CONDITION ELEM	CD
EXTERIOR	V
INTERIOR	V
KITCHEN	V
BATHS	V
HEAT	U
ELECT	U

EFF.YR/AGE	2022 / 0		
COND	0	0 %	
FUNC	30	uc	
ECON	0		
DEPR	30	% GD	70
RCNLD			$503,600