**Key: 7405**

# Town of SCITUATE - Fiscal Year 2024

10/18/2023 5:31 pm SEQ #: 7,081

## LEGAL

| CURRENT OWNER | PARCEL ID | LOCATION |
|---|---|---|
| DIBENEDETTO GENE J & JENNIE M<br>C/O LUCILLE DIBENEDETTO<br>303 LINDEN PONDS WAY, #405<br>HINGHAM, MA 02043 | 72-13-4-0 | 12 PALFREY ST |

| TRANSFER HISTORY | DOS | T | SALE PRICE | BK-PG (Cert) |
|---|---|---|---|---|
| DIBENEDETTO GENE J & JENN | 08/24/1956 | QS | | (23932) |

| CLASS | CLASS% | DESCRIPTION | BN ID | BN | CARD |
|---|---|---|---|---|---|
| 1010 | 100 | SINGLE FAMILY | | 1 | 1 of 1 |

| PMT NO | PMT DT | TY | DESC | AMOUNT | INSP | BY | 1st | % |
|---|---|---|---|---|---|---|---|---|
| 14-173 | 04/09/2014 | 3 | ALTERATIONS | 6,500 | 06/17/2014 | MR | 100 | 100 |

## LAND

| CD | T | AC/SF/UN | Ngh | Infl1 | Infl2 | ADJ BASE | SAF | Infl3 | Lpi | VC | CREDIT AMT | ADJ VALUE |
|---|---|---|---|---|---|---|---|---|---|---|---|---|
| 100 | S | 9,600 | HUM 1.00 | 100 1.00 | 100 1.00 | 550,000 | 3.72 | 100 1.00 | R08 1.25 | | | 450,500 |

| TOTAL | 9,583 SF | ZONING | | FRNT | 194 |
|---|---|---|---|---|---|
| Ngh | HUMAROCK | NOTE | | | |
| Infl1 | FACTOR 100 | | | | |
| Infl2 | PHY 100 | | | | |

| ASSESSED | CURRENT | PREVIOUS |
|---|---|---|
| LAND | 450,500 | 409,500 |
| BUILDING | 134,900 | 126,600 |
| DETACHED | 500 | 500 |
| OTHER | 0 | 0 |
| TOTAL | **585,900** | **536,600** |

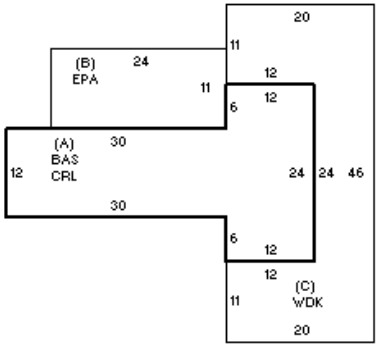


## DETACHED

| TY | QUAL | COND | DIM/NOTE | YB | UNITS | ADJ PRICE | RCNLD |
|---|---|---|---|---|---|---|---|
| SHF | A 1.00 | 30 0.70 | | | 40 | 17.03 | 500 |

PHOTO 06/17/2014

BLDG COMMENTS

## BUILDING

| BUILDING | CD | ADJ | DESC |
|---|---|---|---|
| MODEL | 1 | | RESIDENTIAL |
| STYLE | 6 | 0.85 | COTT/BUNGALOW [100%] |
| QUALITY | A | 1.00 | AVERAGE [100%] |
| FRAME | 1 | 1.00 | WOOD FRAME [100%] |

| MEASURE | 4/20/2010 | PL |
|---|---|---|
| LIST | 4/20/2010 | EST |
| REVIEW | 7/1/2014 | TD |

| YEAR BLT | 1930 | SIZE ADJ | 1.000 |
|---|---|---|---|
| NET AREA | 648 | DETAIL ADJ | 0.722 |
| $NLA(RCN) | $302 | OVERALL | 1.000 |

| CAPACITY | UNITS | ADJ |
|---|---|---|
| STORIES | 1 | 1.00 |
| ROOMS | 4 | 1.00 |
| BEDROOMS | 2 | 1.00 |
| BATHROOMS | 1 | 1.00 |
| # 1/2 BATHS | 0 | 1.00 |
| TOT FIXTURES | 3 | $1,733 |
| # UNITS | 1 | 1.00 |

| ELEMENT | CD | DESCRIPTION | ADJ |
|---|---|---|---|
| FOUNDATION | 3 | CONT WALL | 1.00 |
| EXT COVER | 1 | WD SHINGLES | 1.00 |
| ROOF SHAPE | 1 | GABLE | 1.00 |
| ROOF COVER | 1 | ASPH SHINGLES | 1.00 |
| FLOOR COVER | 2 | SOFTWOOD | 1.00 |
| INT FINISH | 1 | PLASTER | 1.00 |
| HEATING/COOLING | 13 | NONE | 0.85 |
| FUEL SOURCE | 8 | NONE | 1.00 |

| S | BAT | T | DESCRIPTION | UNITS | YB | ADJ PRICE | RCN |
|---|---|---|---|---|---|---|---|
| A | CRL | N | BSMT CRAWL | 648 | | 12.16 | 7,882 |
| A | BAS | L | BASE AREA | 648 | 1930 | 201.36 | 130,480 |
| B | EPA | N | ENCLOSED PORCH | 264 | | 90.20 | 23,813 |
| C | WDK | N | WOOD DECK | 632 | | 38.40 | 24,269 |
| | F11 | O | FPL 1S 1OP | 1 | | 7,281.00 | 7,281 |

| TOTAL RCN | 195,458 |
|---|---|
| CONDITION ELEM | CD |
| EXTERIOR | |
| INTERIOR | |
| KITCHEN | |
| BATHS | |
| HEAT | |
| ELECT | |

| EFF.YR/AGE | 1972 / 50 | |
|---|---|---|
| COND | 31 | 31 % |
| FUNC | 0 | |
| ECON | 0 | |
| DEPR | 31 | % GD 69 |
| RCNLD | | $134,900 |