**Key: 750**

# Town of SCITUATE - Fiscal Year 2024

10/18/2023 5:31 pm SEQ #: 688

## LEGAL

| CURRENT OWNER | PARCEL ID | LOCATION |
|---|---|---|
| **CHRISTOPHER JOHN R &**<br>**ANTUNES SHOSHANA L**<br>**10 UTILITY RD**<br>**SCITUATE, MA 02066** | **32-6-6-0** | **10 UTILITY RD** |

| TRANSFER HISTORY | DOS | T | SALE PRICE | BK-PG (Cert) |
|---|---|---|---|---|
| CHRISTOPHER JOHN R & | 07/31/2020 | QS | 399,900 | 53171-129 |
| PLOURDE BERTRAND E & SHAR | 01/01/1975 | QS | | 3973-728 |
| LORING PHILIP P & MARGARE | 01/01/1971 | XX | | 3636-232 |

| CLASS | CLASS% | DESCRIPTION | BN ID | BN | CARD |
|---|---|---|---|---|---|
| **1010** | **100** | **SINGLE FAMILY** | | **1** | **1 of 1** |

| PMT NO | PMT DT | TY | DESC | AMOUNT | INSP | BY | 1st | % |
|---|---|---|---|---|---|---|---|---|
| 95-312 | 06/01/1995 | 3 | ALTERATIONS | | | | 100 | 100 |
| 89-473 | 08/01/1989 | 3 | ALTERATIONS | | | | 100 | 100 |
| 89-19 | 01/01/1989 | 3 | ALTERATIONS | | | | 100 | 100 |

## LAND

| CD | T | AC/SF/UN | Ngh | Infl1 | Infl2 | ADJ BASE | SAF | Infl3 | Lpi | VC | CREDIT AMT | ADJ VALUE |
|---|---|---|---|---|---|---|---|---|---|---|---|---|
| 100 | S | 14,830 | SC 1.00 | 100 1.00 | 100 1.00 | 396,000 | 2.47 | 100 1.00 | R03 0.90 | | | 332,800 |

| TOTAL | 14,830 SF | ZONING | | FRNT | 103 |
|---|---|---|---|---|---|
| Ngh | SCITUATE | NOTE | . . . . | | |
| Infl1 | FACTOR 100 | | | | |
| Infl2 | PHY 100 | | | | |

| ASSESSED | CURRENT | PREVIOUS |
|---|---|---|
| LAND | 332,800 | 319,400 |
| BUILDING | 219,900 | 195,500 |
| DETACHED | 0 | 0 |
| OTHER | 0 | 0 |
| TOTAL | **552,700** | **514,900** |

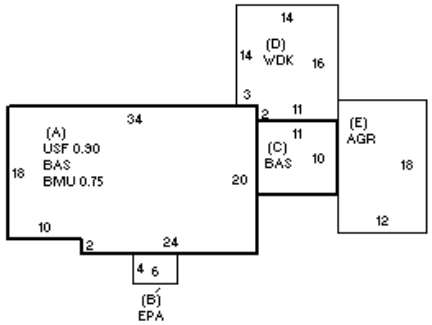


## DETACHED

| TY | QUAL | COND | DIM/NOTE | YB | UNITS | ADJ PRICE | RCNLD |
|---|---|---|---|---|---|---|---|

PHOTO 07/19/2021

## BUILDING

| BUILDING | CD | ADJ | DESC |
|---|---|---|---|
| MODEL | 1 | | RESIDENTIAL |
| STYLE | 7 | 1.20 | CONVENTIONAL [100%] |
| QUALITY | A | 1.00 | AVERAGE [100%] |
| FRAME | 1 | 1.00 | WOOD FRAME [100%] |

| | | |
|---|---|---|
| MEASURE | 7/19/2021 | JD |
| LIST | 7/19/2021 | EST |
| REVIEW | 9/28/2020 | JD |

BLDG COMMENTS

MLS

| | | | |
|---|---|---|---|
| YEAR BLT | 1935 | SIZE ADJ | 1.000 |
| NET AREA | 1,364 | DETAIL ADJ | 1.224 |
| $NLA(RCN) | $299 | OVERALL | 1.000 |

| CAPACITY | UNITS | ADJ |
|---|---|---|
| STORIES | 2 | 1.00 |
| ROOMS | 6 | 1.00 |
| BEDROOMS | 2 | 1.00 |
| BATHROOMS | 1 | 1.00 |
| # 1/2 BATHS | 0 | 1.00 |
| TOT FIXTURES | 3 | $2,938 |
| # UNITS | 1 | 1.00 |

| ELEMENT | CD | DESCRIPTION | ADJ |
|---|---|---|---|
| FOUNDATION | 4 | CONT BSMT WALL | 1.00 |
| EXT COVER | 1 | WD SHINGLES | 1.00 |
| ROOF SHAPE | 1 | GABLE | 1.00 |
| ROOF COVER | 1 | ASPH SHINGLES | 1.00 |
| FLOOR COVER | 24 | COMB | 1.00 |
| INT FINISH | 1 | PLASTER | 1.00 |
| HEATING/COOLING | 2 | HOT WATER | 1.02 |
| FUEL SOURCE | 2 | GAS | 1.00 |

| S | BAT | T | DESCRIPTION | UNITS | YB | ADJ PRICE | RCN |
|---|---|---|---|---|---|---|---|
| A | BMU | N | BSMT UNFINISHED | 495 | | 60.88 | 30,134 |
| A | USF | L | UPPER STORY FIN | 594 | 1935 | 243.56 | 144,673 |
| B | EPA | N | ENCLOSED PORCH | 24 | | 90.21 | 2,165 |
| + | BAS | L | BASE AREA | 770 | 1935 | 267.82 | 206,224 |
| D | WDK | N | WOOD DECK | 218 | | 38.40 | 8,371 |
| E | AGR | N | ATT GARAGE | 216 | | 58.61 | 12,660 |

| TOTAL RCN | 407,165 |
|---|---|

| CONDITION ELEM | CD |
|---|---|
| EXTERIOR | A |
| INTERIOR | A |
| KITCHEN | A |
| BATHS | A |
| HEAT | A |
| ELECT | A |

| EFF.YR/AGE | 1968 / 54 | | |
|---|---|---|---|
| COND | 36 | 36 % | |
| FUNC | 10 | LAYOUT | |
| ECON | 0 | | |
| DEPR | 46 | % GD | 54 |
| RCNLD | $219,900 | | |