Key: 8431

Town of SCITUATE - Fiscal Year 2024

10/18/2023 5:31 pm SEQ #: 8,038

LEGAL

CURRENT OWNER	PARCEL ID	LOCATION
DONEY CHRISTOPHER & ELIZABETH 157 TACK FACTORY POND DR SCITUATE, MA 02066	42-4-24-0	157 TACK FACTORY POND DR

TRANSFER HISTORY	DOS	T	SALE PRICE	BK-PG (Cert)
DONEY CHRISTOPHER & ELIZA	10/06/2022	QS	1,320,000	57305-252
BANAHAN JEAN A	09/17/2008	F	1	36365-207
FERRIE JOHN E & JEAN A	06/01/1993	F	1	11906-170

CLASS	CLASS%	DESCRIPTION	BN ID	BN	CARD
1010	100	SINGLE FAMILY		1	1 of 1

PMT NO	PMT DT	TY	DESC	AMOUNT	INSP	BY	1st	%
		7	OTHERS		07/24/2023	JD	100	100
11-015	03/09/2011	3	ALTERATIONS	3,878	08/02/2011	SJ	100	100
		6	CYCL GROWTH		08/09/2006		100	100
00-32	02/14/2000	3	ALTERATIONS				100	100
92-759	10/01/1992	1	NEW CONST				100	100

LAND

CD	T	AC/SF/UN	Ngh	Infl1	Infl2	ADJ BASE	SAF	Infl3	Lpi	VC	CREDIT AMT	ADJ VALUE
100	S	40,000	WS 1.00	100 1.00	100 1.00	484,000	1.00	100 1.00	TFP 1.10			444,440

TOTAL	40,000 SF	ZONING		FRNT	217
Ngh	W. SCITUATE	NOTE			
Infl1	FACTOR 100				
Infl2	PHY 100				

ASSESSED	CURRENT	PREVIOUS
LAND	444,400	367,300
BUILDING	739,700	649,400
DETACHED	900	600
OTHER	0	0
TOTAL	**1,185,000**	**1,017,300**

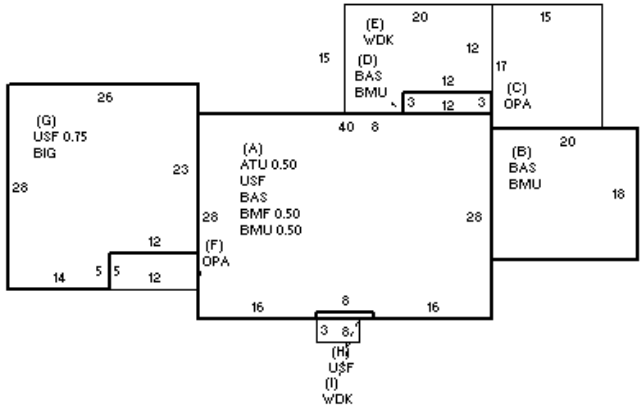

DETACHED

TY	QUAL	COND	DIM/NOTE	YB	UNITS	ADJ PRICE	RCNLD
SHF	A 1.00	30 0.70	8X10		80	15.97	900

PHOTO 07/24/2023

BUILDING

BUILDING	CD	ADJ	DESC
MODEL	1		RESIDENTIAL
STYLE	5	1.00	COLONIAL [100%]
QUALITY	G	1.20	GOOD [100%]
FRAME	1	1.00	WOOD FRAME [100%]

MEASURE	7/24/2023	JD
LIST	7/24/2023	EST
REVIEW	3/3/2011	ER

BLDG COMMENTS

MLS

YEAR BLT	1992	SIZE ADJ	1.000
NET AREA	3,129	DETAIL ADJ	1.040
$NLA(RCN)	$288	OVERALL	1.000

CAPACITY	UNITS	ADJ
STORIES	2	1.00
ROOMS	10	1.00
BEDROOMS	4	1.00
BATHROOMS	2	1.00
# 1/2 BATHS	2	1.00
TOT FIXTURES	11	$10,982
# UNITS	1	1.00

ELEMENT	CD	DESCRIPTION	ADJ
FOUNDATION	4	CONT BSMT WALL	1.00
EXT COVER	2	CLAPBOARD	1.00
ROOF SHAPE	1	GABLE	1.00
ROOF COVER	1	ASPH SHINGLES	1.00
FLOOR COVER	13	COMB	1.00
INT FINISH	2	DRYWALL	1.00
HEATING/COOLING	11	HW/COOL AIR	1.04
FUEL SOURCE	1	OIL	1.00

S	BAT	T	DESCRIPTION	UNITS	YB	ADJ PRICE	RCN
+	BMU	N	BSMT UNFINISHED	952		51.13	48,672
A	BMF	N	BSMT FINISH-SEP	556		71.77	39,905
+	BAS	L	BASE AREA	1,508	1992	234.67	353,876
A	ATU	N	ATTIC UNF	556		44.40	24,686
+	OPA	N	OPEN PORCH	315		61.80	19,468
+	WDK	N	WOOD DECK	282		46.08	12,995
G	BIG	N	BUILT-IN GARAGE	668		51.57	34,448
+	USF	L	UPPER STORY FIN	1,621	1992	213.40	345,928
	GFP	O	GAS FIREPLACE	1		6,667.20	6,667
	ODS	O	OUT DOOR SHOWER	1		1,674.00	1,674
	WPL	O	WHIRLPOOL-ADD	1		2,758.80	2,759

TOTAL RCN	902,060

CONDITION ELEM	CD
EXTERIOR	A
INTERIOR	G
KITCHEN	G
BATHS	G
HEAT	A
ELECT	A

EFF.YR/AGE	2004 / 18	
COND	17	17 %
FUNC	0	
ECON	0	
DEPR	18	% GD 82
RCNLD		$739,700