Key: 8442

Town of SCITUATE - Fiscal Year 2024

10/18/2023 5:31 pm SEQ #: 8,049

LEGAL

CURRENT OWNER	PARCEL ID	LOCATION
MACLEOD ALLISON B & MATTHEW C 777 FIRST PARISH RD SCITUATE, MA 02066	30-1-5-C	777 FIRST PARISH RD

TRANSFER HISTORY	DOS	T	SALE PRICE	BK-PG (Cert)
MACLEOD ALLISON B & MATTH	01/05/2018	QS	720,000	49376-320
GRABOWSKI NEIL F & MONICE	08/08/1997	QS	370,000	15387-212
SHEEHAN DAVID M & LAURIE	04/07/1992	QS	249,000	10884-313

CLASS	CLASS%	DESCRIPTION	BN ID	BN	CARD
1010	100	SINGLE FAMILY		1	1 of 1

PMT NO	PMT DT	TY	DESC	AMOUNT	INSP	BY	1st	%
		7	OTHERS		07/20/2009		100	100
07-398	07/20/2007	3	ALTERATIONS	24,443	06/25/2008	SJ	100	100
04-503	08/06/2004	3	ALTERATIONS	18,000	06/16/2005	SJ	100	100
96-170	05/01/1996	2	ADDITIONS				100	100
87-178	04/26/1989	1	NEW CONST				100	100

LAND

CD	T	AC/SF/UN	Ngh		Infl1		Infl2		ADJ BASE	SAF	Infl3		Lpi		VC	CREDIT AMT	ADJ VALUE
100	S	40,000	WS	1.00	100	1.00	100	1.00	374,000	1.00	100	1.00	R03	0.85			343,430
300	A	0.001	WS	1.00	100	1.00	100	1.00	16,830	1.00	100	1.00	R03	0.85			20

TOTAL	40,044 SF	ZONING		FRNT	287
Ngh	W. SCITUATE	NOTE			
Infl1	FACTOR 100				
Infl2	PHY 100				

ASSESSED	CURRENT	PREVIOUS
LAND	343,500	312,200
BUILDING	774,400	689,000
DETACHED	0	0
OTHER	0	0
TOTAL	**1,117,900**	**1,001,200**

DETACHED

TY	QUAL	COND	DIM/NOTE	YB	UNITS	ADJ PRICE	RCNLD

PHOTO 09/11/2019

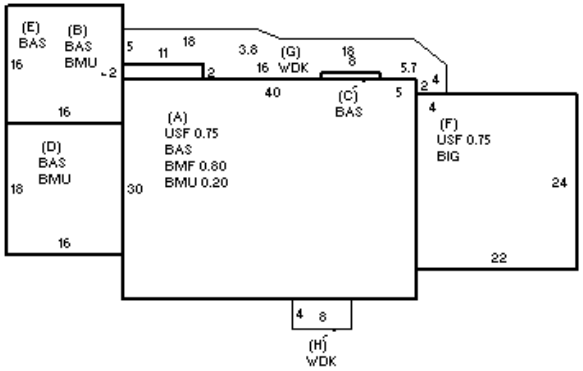

BLDG COMMENTS

BUILDING

BUILDING	CD	ADJ	DESC
MODEL	1		RESIDENTIAL
STYLE	4	1.10	CAPE [100%]
QUALITY	+	1.10	AVG +/GOOD - [100%]
FRAME	1	1.00	WOOD FRAME [100%]

MEASURE	10/27/2015	SJ
LIST	10/27/2015	EST
REVIEW	9/11/2019	JD

YEAR BLT	1989	SIZE ADJ	1.000
NET AREA	3,070	DETAIL ADJ	1.144
$NLA(RCN)	$277	OVERALL	1.000

CAPACITY	UNITS	ADJ
STORIES	1.75	1.00
ROOMS	10	1.00
BEDROOMS	4	1.00
BATHROOMS	2	1.00
# 1/2 BATHS	1	1.00
TOT FIXTURES	10	$10,067
# UNITS	1	1.00

ELEMENT	CD	DESCRIPTION	ADJ
FOUNDATION	4	CONT BSMT WALL	1.00
EXT COVER	2	CLAPBOARD	1.00
ROOF SHAPE	1	GABLE	1.00
ROOF COVER	1	ASPH SHINGLES	1.00
FLOOR COVER	13	COMB	1.00
INT FINISH	2	DRYWALL	1.00
HEATING/COOLING	11	HW/COOL AIR	1.04
FUEL SOURCE	1	OIL	1.00

S	BAT	T	DESCRIPTION	UNITS	YB	ADJ PRICE	RCN
+	BMU	N	BSMT UNFINISHED	550		46.87	25,776
A	BMF	N	BSMT FINISH-SEP	960		65.79	63,159
+	USF	L	UPPER STORY FIN	1,296	1989	215.91	279,814
+	BAS	L	BASE AREA	1,774	1989	237.42	421,178
F	BIG	N	BUILT-IN GARAGE	528		54.78	28,921
+	WDK	N	WOOD DECK	274		42.24	11,574
	F11	O	FPL 1S 1OP	1		8,009.10	8,009
	GEN	O	GENERATOR	1		0.00	
	WPL	O	WHIRLPOOL-ADD	1		2,528.90	2,529

TOTAL RCN	851,027

CONDITION ELEM	CD
EXTERIOR	G
INTERIOR	G
KITCHEN	G
BATHS	G
HEAT	U
ELECT	U

EFF.YR/AGE	2013 / 9	
COND	9 9 %	
FUNC	0	
ECON	0	
DEPR	9	% GD 91
RCNLD		$774,400