Key: 1140

Town of TRURO - Fiscal Year 2024

9/27/2023 7:11 pm SEQ #: 1,118

LEGAL

CURRENT OWNER	PARCEL ID	LOCATION
RUYMANN KAREN M **PO BOX 283** **NO TRURO, MA 02652**	**39-5-0**	**2 BAY VIEW DR**

TRANSFER HISTORY	DOS	T	SALE PRICE	BK-PG (Cert)
RUYMANN KAREN M	03/05/2013	A		27181-46
MACS BAY VIEW REALTY TRUS	08/13/2010	99		24748-274
RUYMANN KAREN ET AL	05/28/2010	QS	1,329,350	24583-180

CLASS	CLASS%	DESCRIPTION	BN ID	BN	CARD
1010	**100**	**SINGLE FAMILY**		**1**	**1 of 1**

PMT NO	PMT DT	TY	DESC	AMOUNT	INSP	BY	1st	%
99-166	10/01/1999	1	SINGLE FAM R	480,000	01/01/2001		100	100

LAND

CD	T	AC/SF/UN	Nbhd	Infl1	Infl2	ADJ BASE	SAF	Infl3	Lpi	VC	CREDIT AMT	ADJ VALUE
100	A	0.700	11 1.00	1 1.00	1 1.00	630,175	1.07	1 1.00	V7 1.75			473,240

TOTAL	30,492 SF	ZONING	RES	FRNT	0
Nbhd	NORTH TRURO	NOTE			
Infl1	NO ADJ				
Infl2	NO ADJ				

ASSESSED	CURRENT	PREVIOUS
LAND	473,200	411,500
BUILDING	1,457,800	1,252,600
DETACHED	0	0
OTHER	0	0
TOTAL	**1,931,000**	**1,664,100**

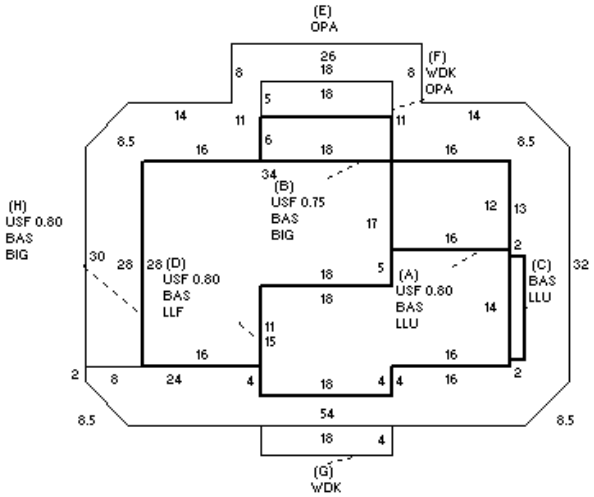

DETACHED

TY	QUAL	COND	DIM/NOTE	YB	UNITS	ADJ PRICE	RCNLD

PHOTO 11/12/2015

BLDG COMMENTS

BUILDING

BUILDING	CD	ADJ	DESC
MODEL	1		RESIDENTIAL
STYLE	4	1.10	CAPE [100%]
QUALITY	V	1.55	VERY GOOD [100%]
FRAME	1	1.00	WOOD FRAME [100%]

MEASURE	11/12/2015	FC
LIST	11/12/2015	EST
REVIEW	4/2/2021	MR

YEAR BLT	2000	SIZE ADJ	0.975
NET AREA	3,393	DETAIL ADJ	1.000
$NLA(RCN)	$551	OVERALL	1.140

CAPACITY	UNITS	ADJ
STORIES(FAR)	1.8	1.00
ROOMS	7	1.00
BEDROOMS	3	1.00
BATHROOMS	4	1.00
FIXTURES	14	$9,800
UNITS	1	1.00

ELEMENT	CD	DESCRIPTION	ADJ
FOUNDATION	4	BSMT WALL	1.00
EXT. COVER	1	WOOD SHINGLES	1.00
ROOF SHAPE	1	GABLE	1.00
ROOF COVER	2	WOOD SHINGLES	1.01
FLOOR COVER	1	HARDWOOD	1.00
INT. FINISH	2	DRYWALL	1.00
HEATING/COOLING	9	WARM/COOL AIR	1.03
FUEL SOURCE	2	GAS	1.00

S	BAT	T	DESCRIPTION	UNITS	YB	ADJ PRICE	RCN
+	LLU	N	LOWER LEVEL UNF	220		268.12	58,986
+	BAS	L	BAS AREA	1,608	2000	505.36	812,620
+	USF	L	UP-STRY FIN	1,259	2000	393.18	495,012
+	BIG	N	BUILT-IN GARAGE	862		124.60	107,410
D	LLF	L	LOWER LEVEL FIN	526	2000	358.55	188,596
+	OPA	N	OPEN PORCH	1,432		100.79	144,325
+	WDK	N	ATT WOOD DECK	162		98.36	15,934
	F22	O	FPL 2S 2OP	1		36,289.60	36,290

TOTAL RCN	1,868,973
CONDITION ELEM	CD

EFF.YR/AGE	2000 / 22	
COND	22	22 %
FUNC	0	
ECON	0	
DEPR	22	% GD 78
RCNLD		$1,457,800