Key: 1167

Town of TRURO - Fiscal Year 2024

9/27/2023 7:11 pm SEQ #: 1.150

LEGAL

CURRENT OWNER	PARCEL ID	LOCATION
SOPEL GEORGE C & GAGAN SARAH K 351 CLINTON ROAD BROOKLINE, MA 02445	39-32-0	13 BAY VIEW DR

TRANSFER HISTORY	DOS	T	SALE PRICE	BK-PG (Cert)
SOPEL GEORGE C &	03/03/2015	QS	925,000	28715-253
PROKOP CHRISTOPHER J &	04/20/2010	O	825,000	24495-293
FOLEY JOHN A ESTATE OF	04/20/2010	99		23280-344+

CLASS	CLASS%	DESCRIPTION	BN ID	BN	CARD
1010	100	SINGLE FAMILY		1	1 of 1

PMT NO	PMT DT	TY	DESC	AMOUNT	INSP	BY	1st	%
18-147X	05/03/2018	6	SHED		08/16/2018	LG	100	100
18-87	03/16/2018	70	POOL	42,000	08/16/2018	LG	100	100
15-016	02/02/2015	3	REPAIR/REMOD	25,000			100	100
		20	NO PERMIT		07/05/2011	FC	100	100
		20	NO PERMIT		07/05/2011	FC	100	100

LAND

CD	T	AC/SF/UN	Nbhd	Infl1	Infl2	ADJ BASE	SAF	Infl3	Lpi	VC	CREDIT AMT	ADJ VALUE
100	A	0.530	11 1.00	1 1.00	1 1.00	900,250	1.30	1 1.00	V9 2.50			620,610

TOTAL	23,087 SF	ZONING	RES	FRNT	0
Nbhd	NORTH TRURO	NOTE	DET PTD=10X9 IN FRONT+14X11 IN REAR OFF SHF.		
Infl1	NO ADJ				
Infl2	NO ADJ				

ASSESSED	CURRENT	PREVIOUS
LAND	620,600	539,600
BUILDING	882,300	730,200
DETACHED	30,500	29,000
OTHER	0	0
TOTAL	**1,533,400**	**1,298,800**

DETACHED

TY	QUAL	COND	DIM/NOTE	YB	UNITS	ADJ PRICE	RCNLD
DGF	A 1.00	A 0.75	24*24	1995	576	22.58	9,800
OSH	G 1.18	G 0.90	7*9	2005	63	8.14	500
PTD	G 1.18	G 0.90	10*9	2005	90	2.71	200
PTD	A 1.00	A 0.75	14*11		154	2.30	300
SHF	G 1.18	A 0.75	12*16	2018	192	18.34	2,600
SPG	A 1.00	A 0.75	18*40	2018	720	31.68	17,100

PHOTO 09/26/2023

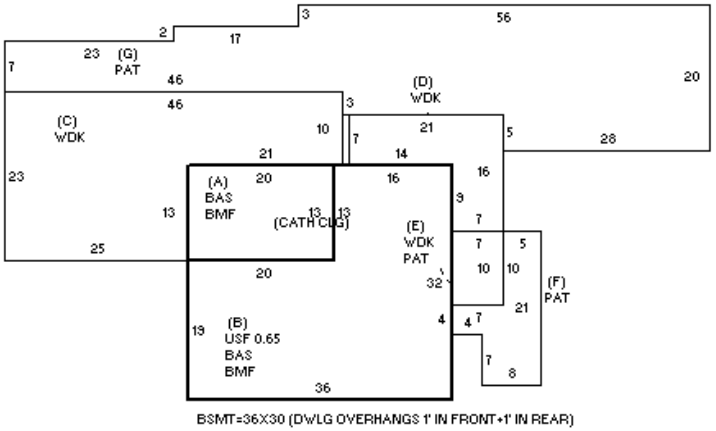

BUILDING

BUILDING	CD	ADJ	DESC
MODEL	1		RESIDENTIAL
STYLE	4	1.10	CAPE [100%]
QUALITY	G	1.35	GOOD [100%]
FRAME	1	1.00	WOOD FRAME [100%]

MEASURE	4/11/2014	FC
LIST	7/14/2015	EST
REVIEW	4/2/2021	MR

BLDG COMMENTS

BMF=FAM RM+2 BR+FULL BATH.

YEAR BLT	1994	SIZE ADJ	1.020
NET AREA	1,732	DETAIL ADJ	1.000
$NLA(RCN)	$653	OVERALL	1.150

CAPACITY	UNITS	ADJ
STORIES(FAR)	1.65	1.00
ROOMS	5	1.00
BEDROOMS	5	1.00
BATHROOMS	3	1.00
FIXTURES	9	$6,300
UNITS	1	1.00

ELEMENT	CD	DESCRIPTION	ADJ
FOUNDATION	4	BSMT WALL	1.00
EXT. COVER	1	WOOD SHINGLES	1.00
ROOF SHAPE	1	GABLE	1.00
ROOF COVER	1	ASPHALT SHINGLE	1.00
FLOOR COVER	1	HARDWOOD	1.00
INT. FINISH	2	DRYWALL	1.00
HEATING/COOLING	11	HOT WAT.-CL AIR	1.05
FUEL SOURCE	1	OIL	1.00

S	BAT	T	DESCRIPTION	UNITS	YB	ADJ PRICE	RCN
+	BMF	N	BSMT FINISH	1,152		191.10	220,147
+	BAS	L	BAS AREA	1,152	1994	481.01	554,127
B	USF	L	UP-STRY FIN	580	1994	378.60	219,589
+	WDK	N	ATT WOOD DECK	1,065		71.38	76,018
+	PAT	N	PATIO	1,500		20.78	31,177
	F21	O	FPL 2S 1OP	1		23,826.10	23,826
	ODS	O	OUT DOOR SHOWER	1		0.00	

TOTAL RCN	1,131,184
CONDITION ELEM	CD

EFF.YR/AGE	2000 / 22	
COND	22	22 %
FUNC	0	
ECON	0	
DEPR	22	% GD 78
RCNLD		$882,300