Key: 1519

Town of TRURO - Fiscal Year 2024

9/27/2023 7:11 pm SEQ #: 1,528

LEGAL

CURRENT OWNER	PARCEL ID	LOCATION
GULAN ANDREA L PO BOX 429 NO TRURO, MA 02652-0429	40-97-0	2 HIGHVIEW LN

TRANSFER HISTORY	DOS	T	SALE PRICE	BK-PG (Cert)
GULAN ANDREA L	06/24/1997	H		10816-158
PALHEIRO ROBERT & ANDREA	03/31/1989	QS	65,000	6681-027
TASHMUIT RLTY NOM TRUST	02/19/1987	QS	70,000	5566-097

CLASS	CLASS%	DESCRIPTION	BN ID	BN	CARD
1010	100	SINGLE FAMILY		1	1 of 1

PMT NO	PMT DT	TY	DESC	AMOUNT	INSP	BY	1st	%
21-403	11/10/2021	7	GARAGE	86,500	07/27/2022	LG	100	100
FY2018		35	RES EXEMPT		11/03/2017		0	0
10-022	02/23/2010	90	BP NVC	6,000	04/28/2011	MR	100	100
95-115	09/22/1995	6	SHED	1,200	08/01/1996		100	100
93-84	07/26/1993	70	POOL	13,000	06/10/1994		100	100

LAND

CD	T	AC/SF/UN	Nbhd		Infl1		Infl2		ADJ BASE	SAF	Infl3		Lpi		VC	CREDIT AMT	ADJ VALUE
100	A	0.775	12	1.00	1	1.00	1	1.00	414,115	1.00	1	1.00	R06	1.15			320,940
300	A	0.005	12	1.00	1	1.00	1	1.00	31,625	1.00	1	1.00	R06	1.15			160

TOTAL	33,977 SF	ZONING	RES	FRNT	0

Nbhd	EAST TRURO
Infl1	NO ADJ
Infl2	NO ADJ

NOTE

ASSESSED	CURRENT	PREVIOUS
LAND	321,100	279,200
BUILDING	613,600	487,400
DETACHED	79,500	13,600
OTHER	0	0
TOTAL	**1,014,200**	**780,200**

DETACHED

TY	QUAL		COND		DIM/NOTE	YB	UNITS	ADJ PRICE	RCNLD
SHF	A	1.00	G	0.90	8*10	1993	80	16.47	1,200
SPV	A	1.00	G	0.90	16*34	1993	544	19.94	9,800
SHF	A	1.00	G	0.90	10*12	1995	120	16.01	1,700
PTD	G	1.18	G	0.90	18*22+10*20		596	2.71	1,500
PTD	G	1.18	G	0.90	10' DIAM CIR		79	2.71	200
GUL	E	1.80	E	1.00	24*32	2022	768	84.78	65,100

PHOTO 05/18/2018

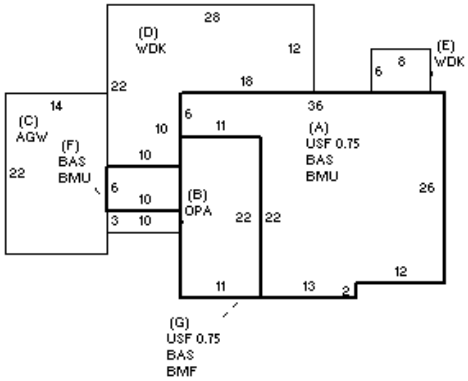

BLDG COMMENTS

BUILDING

BUILDING	CD	ADJ	DESC
MODEL	1		RESIDENTIAL
STYLE	4	1.10	CAPE [100%]
QUALITY	+	1.15	GOOD-/AVE+ [100%]
FRAME	1	1.00	WOOD FRAME [100%]

MEASURE	5/18/2018	LG
LIST	5/22/2018	LG
REVIEW	5/25/2011	MR

YEAR BLT	1989	SIZE ADJ	1.010
NET AREA	1,782	DETAIL ADJ	1.000
$NLA(RCN)	$492	OVERALL	1.120

CAPACITY	UNITS	ADJ
STORIES(FAR)	1.75	1.00
ROOMS	0	1.00
BEDROOMS	2	1.00
BATHROOMS	1.5	1.00
FIXTURES	5	$3,500
UNITS	0	1.00

ELEMENT	CD	DESCRIPTION	ADJ
FOUNDATION			1.00
EXT. COVER	1	WOOD SHINGLES	1.00
ROOF SHAPE	1	GABLE	1.00
ROOF COVER	1	ASPHALT SHINGLE	1.00
FLOOR COVER	1	HARDWOOD	1.00
INT. FINISH	2	DRYWALL	1.00
HEATING/COOLING	2	HOT WATER	1.02
FUEL SOURCE	1	OIL	1.00

S	BAT	T	DESCRIPTION	UNITS	YB	ADJ PRICE	RCN
+	BMU	N	BSMT UNFINISHED	802		93.79	75,222
+	BAS	L	BAS AREA	1,044	1989	395.15	412,536
+	USF	L	UP-STRY FIN	738	1989	307.88	227,214
B	OPA	N	OPEN PORCH	30		147.13	4,414
C	AGW	N	AT GAR W/LOFT A	308		191.10	58,860
+	WDK	N	ATT WOOD DECK	484		62.55	30,273
G	BMF	N	BSMT FINISH	242		185.86	44,978
	F21	O	FPL 2S 1OP	1		19,573.00	19,573
	ODS	O	OUT DOOR SHOWER	1		0.00	

TOTAL RCN	876,570

CONDITION ELEM	CD

EFF.YR/AGE	1989 / 33	
COND	30	30 %
FUNC	0	
ECON	0	
DEPR	30	% GD 70
RCNLD		$613,600