Key: 1554

Town of TRURO - Fiscal Year 2024

9/27/2023 7:11 pm SEQ #: 1.559

LEGAL

CURRENT OWNER	PARCEL ID	LOCATION
SILVA EMMA M PO BOX 282 NO TRURO, MA 02652	40-134-0	8 ANDREW WAY

TRANSFER HISTORY	DOS	T	SALE PRICE	BK-PG (Cert)
SILVA EMMA M	05/11/2018	U	200,000	31259-306
CHARIOT REALTY TRUST	01/21/1999	N	385,000	12008-019

CLASS	CLASS%	DESCRIPTION	BN ID	BN	CARD
1010	100	SINGLE FAMILY		1	1 of 1

PMT NO	PMT DT	TY	DESC	AMOUNT	INSP	BY	1st	%
FY2023		35	RES EXEMPT		08/30/2022		0	0
19-239	08/13/2019	1	SINGLE FAM R	500,000	12/15/2020	LG	100	100

LAND

CD	T	AC/SF/UN	Nbhd		Infl1		Infl2		ADJ BASE	SAF	Infl3		Lpi		VC	CREDIT AMT	ADJ VALUE
100	A	0.775	12	1.00	1	1.00	1	1.00	360,100	1.00	1	1.00	R03	1.00			279,080
300	A	0.146	12	1.00	1	1.00	1	1.00	27,500	1.00	1	1.00	R03	1.00			4,020

TOTAL	40,100 SF	ZONING	RES	FRNT	0
Nbhd	EAST TRURO	NOTE	5/11/18 SF chng per Bk 31259 Pg 306		
Infl1	NO ADJ				
Infl2	NO ADJ				

ASSESSED	CURRENT	PREVIOUS
LAND	283,100	246,100
BUILDING	926,400	760,200
DETACHED	0	0
OTHER	0	0
TOTAL	**1,209,500**	**1,006,300**

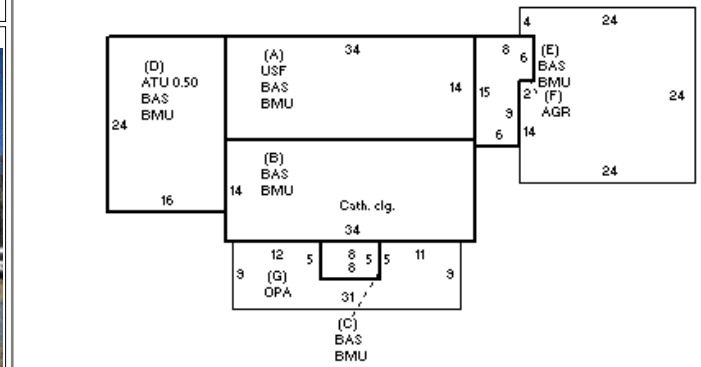

DETACHED

TY	QUAL	COND	DIM/NOTE	YB	UNITS	ADJ PRICE	RCNLD

PHOTO 12/15/2020

BUILDING

BUILDING	CD	ADJ	DESC
MODEL	1		RESIDENTIAL
STYLE	4	1.10	CAPE [100%]
QUALITY	+	1.15	GOOD-/AVE+ [100%]
FRAME	1	1.00	WOOD FRAME [100%]

MEASURE	12/15/2020	LG
LIST	12/15/2020	LG
REVIEW		

BLDG COMMENTS

Sec D ATU is unfinished 4th BR.

YEAR BLT	2019	SIZE ADJ	1.010
NET AREA	1,954	DETAIL ADJ	1.010
$NLA(RCN)	$489	OVERALL	1.100

CAPACITY	UNITS	ADJ
STORIES(FAR)	0	1.00
ROOMS	5	1.00
BEDROOMS	3	1.00
BATHROOMS	2.5	1.00
FIXTURES	11	$7,700
UNITS	0	1.00

ELEMENT	CD	DESCRIPTION	ADJ
FOUNDATION	3	CONTIN WALL	1.00
EXT. COVER	1	WOOD SHINGLES	1.00
ROOF SHAPE	1	GABLE	1.00
ROOF COVER	1	ASPHALT SHINGLE	1.00
FLOOR COVER	1	HARDWOOD	1.00
INT. FINISH	2	DRYWALL	1.00
HEATING/COOLING	1	FORCED AIR	1.00
FUEL SOURCE	2	GAS	1.00

S	BAT	T	DESCRIPTION	UNITS	YB	ADJ PRICE	RCN
+	BMU	N	BSMT UNFINISHED	1,478		82.17	121,447
+	BAS	L	BAS AREA	1,002	2019	380.48	381,246
A	USF	L	UP-STRY FIN	476	2019	305.47	145,402
B	BAS	L	BAS AREA	476	2019	380.48	181,111
D	ATU	N	UNFIN ATTIC	192		104.38	20,041
F	AGR	N	ATTACHED GARAGE	564		115.47	65,124
G	OPA	N	OPEN PORCH	239		89.69	21,436
	GFP	O	GAS FIREPLACE	1		11,534.60	11,535

TOTAL RCN	955,042
CONDITION ELEM	CD
EFF.YR/AGE	2019 / 3
COND	03 03 %
FUNC	0
ECON	0
DEPR	3 % GD 97
RCNLD	$926,400