Key: 1799

Town of TRURO - Fiscal Year 2024

9/27/2023 7:11 pm SEQ #: 1,822

LEGAL

CURRENT OWNER	PARCEL ID	LOCATION
CROWS NEST PROPERTIES LLC C/O BERRY ADAM J & BENJAMIN J PO BOX 533 PROVINCETOWN, MA 02657	42-217-0	6 ELIZABETH WAY

TRANSFER HISTORY	DOS	T	SALE PRICE	BK-PG (Cert)
BERRY ADAM J & BENJAMIN J	06/12/2023	QS	895,000	35835-252
CROWS NEST PROPERTIES LLC	07/29/2016	QS	605,000	29830-267
BOWDEN KAY E &	10/06/2000	J		13285-278

CLASS	CLASS%	DESCRIPTION	BN ID	BN	CARD
1010	100	SINGLE FAMILY		1	1 of 1

PMT NO	PMT DT	TY	DESC	AMOUNT	INSP	BY	1st	%
22-040X	02/02/2022	4	REHAB	12,240	06/16/2022	LG	100	100
05-130	08/23/2005	2	ADDITION	55,000	05/10/2007	JH	100	100
03-144	08/22/2003	6	SHED	1,600	03/25/2004	BT	100	100
03-027	02/19/2003	2	ADDITION	40,000	03/25/2004	BT	100	100

LAND

CD	T	AC/SF/UN	Nbhd	Infl1	Infl2	ADJ BASE	SAF	Infl3	Lpi	VC	CREDIT AMT	ADJ VALUE
100	A	0.664	13 1.00	1 1.00	1 1.00	414,115	1.11	1 1.00	R05 1.15			305,960

TOTAL	28,930 SF	ZONING	RES	FRNT	0
Nbhd	CORN HILL	NOTE	6/12/2023 SF chng per deed 35835-252. FY08=ADDED PTD+WDK+HTB PER 5/07 BP INSPEC.		
Infl1	NO ADJ				
Infl2	NO ADJ				

ASSESSED	CURRENT	PREVIOUS
LAND	306,000	265,500
BUILDING	648,600	635,000
DETACHED	2,900	5,300
OTHER	0	0
TOTAL	**957,500**	**905,800**

SEC A+F BUILT 1969; SEC B ADDED 2003; SEC D+E ADDED 2005

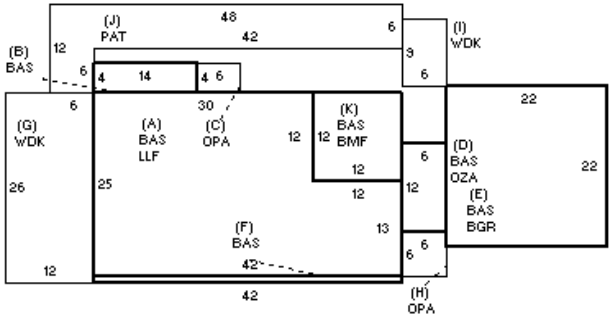

DETACHED

TY	QUAL	COND	DIM/NOTE	YB	UNITS	ADJ PRICE	RCNLD
SHF	G 1.18	A 0.75	8*12	2004	96	19.44	1,400
PTD	A 1.00	P+ 0.50	8*42		336	2.30	400
WDK	A 1.00	P+ 0.50	12*12		144	11.00	800
WDK	A 1.00	A 0.75	ODS 5*8		40	11.00	300

PHOTO 06/16/2022

BUILDING

BUILDING	CD	ADJ	DESC
MODEL	1		RESIDENTIAL
STYLE	2	1.00	RAISED RANCH [100%]
QUALITY	A	1.00	AVERAGE [100%]
FRAME	1	1.00	WOOD FRAME [100%]

MEASURE	7/20/2023	LG
LIST	7/20/2023	LG
REVIEW	6/13/2002	JC

BLDG COMMENTS

LLF=LARGE RM WITH KITCHEN SINK, KITCH CABINETS, FIREPLACE, BEDROOM & FULL BATH. BMF=MECH RM (12x12).

YEAR BLT	1969	SIZE ADJ	0.990
NET AREA	2,610	DETAIL ADJ	1.000
$NLA(RCN)	$319	OVERALL	1.020

CAPACITY	UNITS	ADJ
STORIES(FAR)	1	1.00
ROOMS	7	1.00
BEDROOMS	4	1.00
BATHROOMS	3	1.00
FIXTURES	11	$7,700
UNITS	0	1.00

ELEMENT	CD	DESCRIPTION	ADJ
FOUNDATION	4	BSMT WALL	1.00
EXT. COVER	1	WOOD SHINGLES	1.00
ROOF SHAPE	1	GABLE	1.00
ROOF COVER	1	ASPHALT SHINGLE	1.00
FLOOR COVER	2	SOFTWOOD	1.00
INT. FINISH	2	DRYWALL	1.00
HEATING/COOLING	2	HOT WATER	1.02
FUEL SOURCE	2	GAS	1.00

S	BAT	T	DESCRIPTION	UNITS	YB	ADJ PRICE	RCN
A	LLF	L	LOWER LEVEL FIN	906	2003	202.37	183,349
+	BAS	L	BAS AREA	1,050	1969	296.21	311,018
+	BAS	L	BAS AREA	654	2003	296.21	193,720
+	OPA	N	OPEN PORCH	60		102.39	6,144
D	OZA	N	OPEN BRZWAY	72		70.36	5,066
E	BGR	N	SF BSMT GARAGE	484		96.22	46,570
+	WDK	N	ATT WOOD DECK	366		51.59	18,880
J	PAT	N	PATIO	324		15.02	4,867
K	BMF	N	BSMT FINISH	144		144.27	20,775
	F12	O	FPL 1S 2OP	1		15,193.50	15,194
	GFP	O	GAS FIREPLACE	2		9,116.45	18,233
	ODS	O	OUT DOOR SHOWER	1		0.00	

TOTAL RCN	831,516
CONDITION ELEM	CD

EFF.YR/AGE	2000 / 22	
COND	22	22 %
FUNC	0	
ECON	0	
DEPR	22	% GD 78
RCNLD		$648,600