Key: 1821

Town of TRURO - Fiscal Year 2024

9/27/2023 7:11 pm SEQ #: 1,845

LEGAL

CURRENT OWNER	PARCEL ID	LOCATION
FAY T GREENWALD REV TRUST TRS:FAY T & DENNIS H GREENWALD 258 EVANDALE ROAD SCARSDALE, NY 10583	42-239-0	24 GREAT HOLLOW RD

TRANSFER HISTORY	DOS	T	SALE PRICE	BK-PG (Cert)
FAY T GREENWALD REV TRUST	06/24/2019	F	1	(219776)
GREENWALD FAY T	07/02/1991	QS	140,000	(123783)

CLASS	CLASS%	DESCRIPTION	BN ID	BN	CARD
1010	100	SINGLE FAMILY		1	1 of 1

PMT NO	PMT DT	TY	DESC	AMOUNT	INSP	BY	1st	%
91-092	08/26/1991	1	SINGLE FAM R	180,000	07/10/1992		100	100

LAND

CD	T	AC/SF/UN	Nbhd		Infl1		Infl2		ADJ BASE	SAF	Infl3		Lpi		VC	CREDIT AMT	ADJ VALUE
100	A	0.775	11	1.00	1	1.00	1	1.00	630,175	1.00	1	1.00	V5	1.75			488,390
300	A	1.265	11	1.00	1	1.00	1	1.00	48,125	1.00	1	1.00	V5	1.75			60,880

TOTAL	2.040 Acres	ZONING	RES	FRNT	0
Nbhd	NORTH TRURO	NOTE	SUBJECT TO+HAS BENEFIT OF VIEW RESTRICTION IN 10-LOT SUBDIV (42-238 TO 42-247) PER COVENANTS IN BK 3347/250.		
Infl1	NO ADJ				
Infl2	NO ADJ				

ASSESSED	CURRENT	PREVIOUS
LAND	549,300	477,600
BUILDING	823,200	672,900
DETACHED	0	0
OTHER	0	0
TOTAL	**1,372,500**	**1,150,500**

CRAWL UNDER SEC B ONLY 3' HIGH SO=N/V
HAS 5 INVERTERS FOR MINI-SPLIT SYSTEM

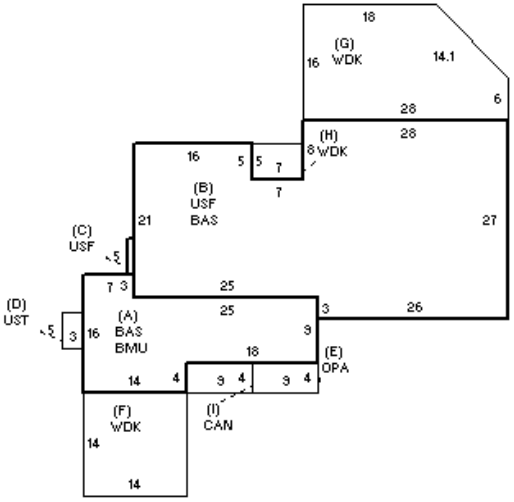

DETACHED

TY	QUAL	COND	DIM/NOTE	YB	UNITS	ADJ PRICE	RCNLD

PHOTO 05/03/2021

BUILDING

BUILDING	CD	ADJ	DESC
MODEL	1		RESIDENTIAL
STYLE	5	1.05	COLONIAL [100%]
QUALITY	G	1.35	GOOD [100%]
FRAME	1	1.00	WOOD FRAME [100%]

MEASURE	5/3/2021	LG
LIST	6/14/2021	LG
REVIEW	11/22/2010	MR

BLDG COMMENTS

6/14/2021 Owner confirmed interior data via email (C-19).

YEAR BLT	1991	SIZE ADJ	0.985
NET AREA	2,766	DETAIL ADJ	1.000
$NLA(RCN)	$425	OVERALL	1.070

CAPACITY	UNITS	ADJ
STORIES(FAR)	2	1.00
ROOMS	8	1.00
BEDROOMS	6	1.00
BATHROOMS	3.5	1.00
FIXTURES	12	$8,400
UNITS	0	1.00

ELEMENT	CD	DESCRIPTION	ADJ
FOUNDATION	4	BSMT WALL	1.00
EXT. COVER	1	WOOD SHINGLES	1.00
ROOF SHAPE	1	GABLE	1.00
ROOF COVER	1	ASPHALT SHINGLE	1.00
FLOOR COVER	3	W/W CARPET	1.00
INT. FINISH	2	DRYWALL	1.00
HEATING/COOLING	2	HOT WATER	1.02
FUEL SOURCE	1	OIL	1.00

S	BAT	T	DESCRIPTION	UNITS	YB	ADJ PRICE	RCN
A	BMU	N	BSMT UNFINISHED	365		116.23	42,425
+	BAS	L	BAS AREA	1,563	1991	423.72	662,273
+	USF	L	UP-STRY FIN	1,203	1991	324.72	390,633
D	UST	N	UTILITY STORAGE	15		154.23	2,314
E	OPA	N	OPEN PORCH	36		160.94	5,794
+	WDK	N	ATT WOOD DECK	629		64.13	40,340
I	CAN	N	CANOPY	36		65.89	2,372
	F21	O	FPL 2S 1OP	1		21,407.90	21,408
	ODS	O	OUT DOOR SHOWER	1		0.00	

TOTAL RCN	1,175,958

CONDITION ELEM	CD

EFF.YR/AGE	1991 / 31	
COND	30	30 %
FUNC	0	
ECON	0	
DEPR	30	% GD 70
RCNLD		$823,200