Key: 2027

Town of TRURO - Fiscal Year 2024

9/27/2023 7:11 pm SEQ #: 2,064

LEGAL

CURRENT OWNER	PARCEL ID	LOCATION
RICKS JAMES LEWIS 15 LEFFERTS PLACE BROOKLYN, NY 11238	43-155-0	13 OVERLOOK DR

TRANSFER HISTORY	DOS	T	SALE PRICE	BK-PG (Cert)
RICKS JAMES LEWIS	06/15/2022	QS	1,150,000	35189-93
SWAN ABIGAIL G &	04/24/1992	99		7986-94

CLASS	CLASS%	DESCRIPTION	BN ID	BN	CARD
1010	100	SINGLE FAMILY		1	1 of 1

PMT NO	PMT DT	TY	DESC	AMOUNT	INSP	BY	1st	%
93-57	05/26/1993	1	SINGLE FAM R	100,000	06/06/1994		100	100

LAND

CD	T	AC/SF/UN	Nbhd	Infl1	Infl2	ADJ BASE	SAF	Infl3	Lpi	VC	CREDIT AMT	ADJ VALUE
100	A	0.775	12 1.00	1 1.00	1 1.00	360,100	1.00	1 1.00	R03 1.00			279,080
300	A	0.062	12 1.00	1 1.00	1 1.00	27,500	1.00	1 1.00	R03 1.00			1,710

TOTAL	36,457 SF	ZONING	RES	FRNT	0
Nbhd	EAST TRURO	NOTE	6/15/2022 SF chng per deed 35189-93. NO WATERVIEW PER 12/09 LIST.		
Infl1	NO ADJ				
Infl2	NO ADJ				

ASSESSED	CURRENT	PREVIOUS
LAND	280,800	244,100
BUILDING	778,600	670,200
DETACHED	0	0
OTHER	0	0
TOTAL	**1,059,400**	**914,300**

DETACHED

TY	QUAL	COND	DIM/NOTE	YB	UNITS	ADJ PRICE	RCNLD

PHOTO 04/19/2019

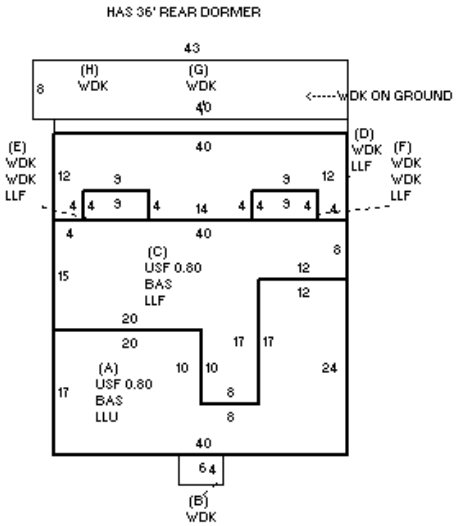

BLDG COMMENTS

BUILDING

BUILDING	CD	ADJ	DESC
MODEL	1		RESIDENTIAL
STYLE	4	1.10	CAPE [100%]
QUALITY	A	1.00	AVERAGE [100%]
FRAME	1	1.00	WOOD FRAME [100%]

MEASURE	4/19/2019	LG
LIST	4/19/2019	LG
REVIEW	4/6/2021	MR

YEAR BLT	1993	SIZE ADJ	0.975
NET AREA	3,380	DETAIL ADJ	1.000
$NLA(RCN)	$324	OVERALL	1.130

CAPACITY	UNITS	ADJ
STORIES(FAR)	1.75	1.00
ROOMS	8	1.00
BEDROOMS	5	1.00
BATHROOMS	3	1.00
FIXTURES	14	$9,800
UNITS	0	1.00

ELEMENT	CD	DESCRIPTION	ADJ
FOUNDATION			1.00
EXT. COVER	1	WOOD SHINGLES	1.00
ROOF SHAPE	1	GABLE	1.00
ROOF COVER	2	WOOD SHINGLES	1.01
FLOOR COVER	4	TILE	1.00
INT. FINISH	2	DRYWALL	1.00
HEATING/COOLING	3	RADIANT	1.02
FUEL SOURCE	2	GAS	1.00

S	BAT	T	DESCRIPTION	UNITS	YB	ADJ PRICE	RCN
A	LLU	N	LOWER LEVEL UNF	684		168.29	115,109
+	BAS	L	BAS AREA	1,280	1993	331.38	424,169
+	USF	L	UP-STRY FIN	1,024	1993	255.43	261,560
+	WDK	N	ATT WOOD DECK	1,000		49.66	49,661
+	LLF	L	LOWER LEVEL FIN	1,076	1993	216.55	233,011
	MST	O	MASONRY STACK	1		3,315.20	3,315
	ODS	O	OUT DOOR SHOWER	1		0.00	

TOTAL RCN	1,096,626

CONDITION ELEM	CD

EFF.YR/AGE	1993 / 29	
COND	29	29 %
FUNC	0	
ECON	0	
DEPR	29	% GD 71
RCNLD		$778,600