Key: 2042

Town of TRURO - Fiscal Year 2024

9/27/2023 7:11 pm SEQ #: 2,079

LEGAL

CURRENT OWNER	PARCEL ID	LOCATION
NAGLE RICHARD J LIVING TRUST &	43-170-0	13 MORRIS AVE
NAGLE KATHERINE G LIVING TRUST		
2611 NO RIVERSIDE DR UNIT 306		
POMPANO BEACH, FL 33062-1238		

TRANSFER HISTORY	DOS	T	SALE PRICE	BK-PG (Cert)
NAGLE RICHARD J LIVING TR	10/27/2011	99		25789-240
NAGLE RICHARD J & KATHERI	04/06/1998	QS	103,000	11339-173
S & R REALTY TRUST	09/08/1997	QS	70,900	10939-161

CLASS	CLASS%	DESCRIPTION	BN ID	BN	CARD
1010	100	SINGLE FAMILY		1	1 of 1

PMT NO	PMT DT	TY	DESC	AMOUNT	INSP	BY	1st	%
22-270X	06/28/2022	90	BP NVC	2,397	10/20/2022	LG	100	100
01-072	05/01/2001	2	ADDITION	25,000	02/15/2002	BT	100	100
98-053	03/01/1998	1	SINGLE FAM R	195,000	01/01/1999		100	100
97-184	12/01/1997	10	ALL OTHERS	120,000	01/01/1999		100	100

LAND

CD	T	AC/SF/UN	Nbhd		Infl1		Infl2		ADJ BASE	SAF	Infl3		Lpi		VC	CREDIT AMT	ADJ VALUE
100	A	0.775	12	1.00	1	1.00	1	1.00	414,115	1.00	1	1.00	V4	1.15			320,940
300	A	0.005	12	1.00	1	1.00	1	1.00	31,625	1.00	1	1.00	V4	1.15			160

TOTAL	33,977 SF	ZONING	RES	FRNT	0
Nbhd	EAST TRURO	NOTE			
Infl1	NO ADJ				
Infl2	NO ADJ				

ASSESSED	CURRENT	PREVIOUS
LAND	321,100	279,200
BUILDING	855,800	707,900
DETACHED	0	0
OTHER	0	0
TOTAL	**1,176,900**	**987,100**

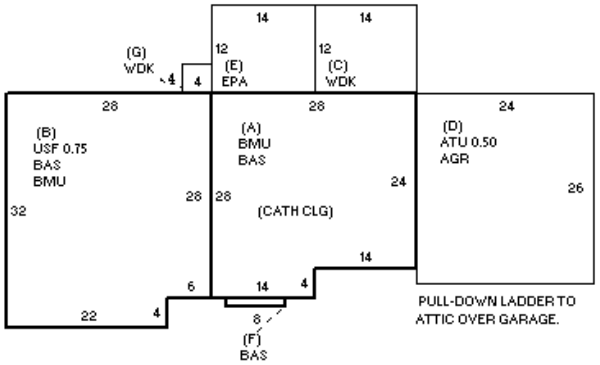

DETACHED

TY	QUAL	COND	DIM/NOTE	YB	UNITS	ADJ PRICE	RCNLD

PHOTO 03/10/2023

BUILDING

BUILDING	CD	ADJ	DESC
MODEL	1		RESIDENTIAL
STYLE	4	1.10	CAPE [100%]
QUALITY	+	1.15	GOOD-/AVE+ [100%]
FRAME	1	1.00	WOOD FRAME [100%]

MEASURE	3/10/2023	LG
LIST	5/9/2023	LG
REVIEW	11/29/2010	MR

BLDG COMMENTS

CENTRAL AIR ON 1ST FLR ONLY; 2ND FLR HAS MINI-SPLIT UNIT IN BEDROOM.

YEAR BLT	1998	SIZE ADJ	0.995
NET AREA	2,262	DETAIL ADJ	1.005
$NLA(RCN)	$498	OVERALL	1.150

CAPACITY	UNITS	ADJ
STORIES(FAR)	1.75	1.00
ROOMS	5	1.00
BEDROOMS	3	1.00
BATHROOMS	2.5	1.00
FIXTURES	8	$5,600
UNITS	0	1.00

ELEMENT	CD	DESCRIPTION	ADJ
FOUNDATION	4	BSMT WALL	1.00
EXT. COVER	1	WOOD SHINGLES	1.00
ROOF SHAPE	1	GABLE	1.00
ROOF COVER	1	ASPHALT SHINGLE	1.00
FLOOR COVER	1	HARDWOOD	1.00
INT. FINISH	2	DRYWALL	1.00
HEATING/COOLING	10	HOT/COLD WATER	1.05
FUEL SOURCE	1	OIL	1.00

S	BAT	T	DESCRIPTION	UNITS	YB	ADJ PRICE	RCN
A	BAS	L	BAS AREA	728	1998	385.99	281,003
+	BMU	N	BSMT UNFINISHED	1,600		84.63	135,406
B	USF	L	UP-STRY FIN	654	1998	311.43	203,676
+	WDK	N	ATT WOOD DECK	184		75.13	13,823
D	AGR	N	ATTACHED GARAGE	624		116.22	72,523
D	ATU	N	UNFIN ATTIC	312		106.97	33,375
E	EPA	N	ENCL PORCH	168		173.39	29,130
+	BAS	L	BAS AREA	880	1998	385.99	339,674
	GFP	O	GAS FIREPLACE	1		11,879.80	11,880
	ODS	O	OUT DOOR SHOWER	1		0.00	

TOTAL RCN	1,126,089
CONDITION ELEM	CD

EFF.YR/AGE	1998 / 24		
COND	24	24 %	
FUNC	0		
ECON	0		
DEPR	24	% GD	76
RCNLD			$855,800