Key: 2076

Town of TRURO - Fiscal Year 2024

9/27/2023 7:11 pm SEQ #: 2,114

LEGAL

CURRENT OWNER	PARCEL ID	LOCATION
NICKERSON LINNELL O ESTATE PO BOX 529 TRURO, MA 02666-0529	43-204-0	1 MORRIS AVE

TRANSFER HISTORY	DOS	T	SALE PRICE	BK-PG (Cert)
NICKERSON LINNELL O ESTAT	09/19/2000	A	50,000	13247-103
MORRIS VIOLA L	03/02/1946	99		642-26

CLASS	CLASS%	DESCRIPTION	BN ID	BN	CARD
1010	100	SINGLE FAMILY		1	1 of 1

PMT NO	PMT DT	TY	DESC	AMOUNT	INSP	BY	1st	%
22-095X	03/07/2022	90	BP NVC	5,600	05/13/2022	LG	100	100
01-067	04/25/2001	1	SINGLE FAM R	142,000	02/15/2002	BT	100	100

LAND

CD	T	AC/SF/UN	Nbhd	Infl1	Infl2	ADJ BASE	SAF	Infl3	Lpi	VC	CREDIT AMT	ADJ VALUE
100	A	0.775	12 1.00	1 1.00	1 1.00	360,100	1.00	1 1.00	R03 1.00			279,080
300	A	0.145	12 1.00	1 1.00	1 1.00	27,500	1.00	1 1.00	R03 1.00			3,990

TOTAL	40,075 SF	ZONING	RES	FRNT	0

Nbhd	EAST TRURO
Infl1	NO ADJ
Infl2	NO ADJ

NOTE

ASSESSED	CURRENT	PREVIOUS
LAND	283,100	246,100
BUILDING	748,900	615,700
DETACHED	0	0
OTHER	0	0
TOTAL	**1,032,000**	**861,800**

DETACHED

TY	QUAL	COND	DIM/NOTE	YB	UNITS	ADJ PRICE	RCNLD

PHOTO 11/05/2021

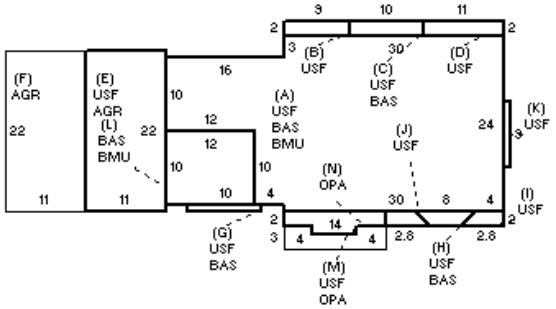

BUILDING

BUILDING	CD	ADJ	DESC
MODEL	1		RESIDENTIAL
STYLE	5	1.05	COLONIAL [100%]
QUALITY	+	1.15	GOOD-/AVE+ [100%]
FRAME	1	1.00	WOOD FRAME [100%]

MEASURE	11/5/2021	LG
LIST	11/5/2021	LG
REVIEW	11/29/2010	MR

BLDG COMMENTS

Pellet stove in LR.

YEAR BLT	2001	SIZE ADJ	0.995
NET AREA	2,389	DETAIL ADJ	1.000
$NLA(RCN)	$397	OVERALL	1.070

CAPACITY	UNITS	ADJ
STORIES(FAR)	2	1.00
ROOMS	6	1.00
BEDROOMS	3	1.00
BATHROOMS	2.5	1.00
FIXTURES	8	$5,600
UNITS	0	1.00

ELEMENT	CD	DESCRIPTION	ADJ
FOUNDATION	4	BSMT WALL	1.00
EXT. COVER	4	VINYL	1.00
ROOF SHAPE	1	GABLE	1.00
ROOF COVER	1	ASPHALT SHINGLE	1.00
FLOOR COVER	3	W/W CARPET	1.00
INT. FINISH	2	DRYWALL	1.00
HEATING/COOLING	2	HOT WATER	1.02
FUEL SOURCE	1	OIL	1.00

S	BAT	T	DESCRIPTION	UNITS	YB	ADJ PRICE	RCN
+	BMU	N	BSMT UNFINISHED	1,040		84.48	87,859
+	USF	L	UP-STRY FIN	1,307	2001	279.42	365,198
+	BAS	L	BAS AREA	962	2001	371.90	357,770
+	AGR	N	ATTACHED GARAGE	484		115.68	55,989
L	BAS	L	BAS AREA	120	2001	371.91	44,629
+	OPA	N	OPEN PORCH	71		124.14	8,814
	F21	O	FPL 2S 1OP	1		18,421.50	18,422
	MST	O	MASONRY STACK	1		3,684.10	3,684

TOTAL RCN	947,966

CONDITION ELEM	CD

EFF.YR/AGE	2001 / 21	
COND	21 21 %	
FUNC	0	
ECON	0	
DEPR	21	% GD 79
RCNLD	$748,900	