Key: 2176

Town of TRURO - Fiscal Year 2024

9/27/2023 7:11 pm SEQ #: 2,213

LEGAL

CURRENT OWNER	PARCEL ID	LOCATION
OVER THE TOP TRUST TRS: DONIGER ANTHONY 1319 E 55TH ST CHICAGO, IL 60615	45-67-0	25 RESOLUTION RD

TRANSFER HISTORY	DOS	T	SALE PRICE	BK-PG (Cert)
OVER THE TOP TRUST	04/11/2005	99		19707-342
DONIGER WENDY	10/05/1992	QS	325,000	8237-208

CLASS	CLASS%	DESCRIPTION	BN ID	BN	CARD
1010	100	SINGLE FAMILY		1	1 of 1

PMT NO	PMT DT	TY	DESC	AMOUNT	INSP	BY	1st	%

LAND

CD	T	AC/SF/UN	Nbhd		Infl1		Infl2		ADJ BASE	SAF	Infl3		Lpi		VC	CREDIT AMT	ADJ VALUE
100	A	0.775	13	1.00	1	1.00	1	1.00	1,080,300	1.00	1	1.00	V14	3.00			837,230
300	A	0.425	13	1.00	1	1.00	1	1.00	82,500	1.00	1	1.00	V14	3.00			35,060

TOTAL	1.200 Acres	ZONING	RES	FRNT	0
Nbhd	CORN HILL	NOTE	FY11=DELETED TOPO PER FIELD REV (SAME AS REST OF NBHD).		
Infl1	NO ADJ				
Infl2	NO ADJ				

ASSESSED	CURRENT	PREVIOUS
LAND	872,300	758,400
BUILDING	490,700	398,300
DETACHED	0	0
OTHER	0	0
TOTAL	**1,363,000**	**1,156,700**

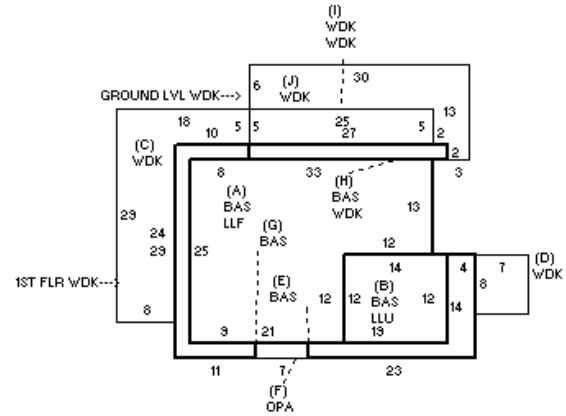

DETACHED

TY	QUAL	COND	DIM/NOTE	YB	UNITS	ADJ PRICE	RCNLD

PHOTO 07/14/2017

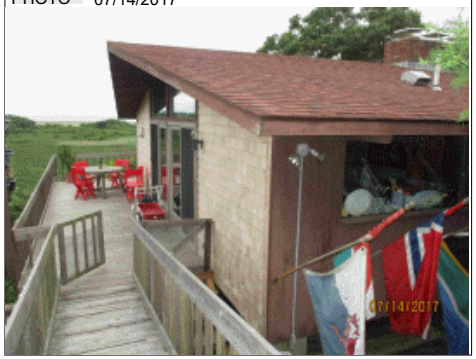

BUILDING

BUILDING	CD	ADJ	DESC
MODEL	1		RESIDENTIAL
STYLE	8	1.10	CONTEMPORARY [100%]
QUALITY	+	1.15	GOOD-/AVE+ [100%]
FRAME	1	1.00	WOOD FRAME [100%]

MEASURE	7/14/2017	LG
LIST	7/14/2017	LG
REVIEW	4/6/2021	MR

BLDG COMMENTS

FY11 CHGS PER 10/09 M+L.

YEAR BLT	1978	SIZE ADJ	1.010
NET AREA	1,770	DETAIL ADJ	1.000
$NLA(RCN)	$408	OVERALL	1.120

CAPACITY	UNITS	ADJ
STORIES(FAR)	1	1.00
ROOMS	6	1.00
BEDROOMS	4	1.00
BATHROOMS	2	1.00
FIXTURES	6	$4,200
UNITS	0	1.00

ELEMENT	CD	DESCRIPTION	ADJ
FOUNDATION			1.00
EXT. COVER	8	TEX PLYWOOD	1.00
ROOF SHAPE	1	GABLE	1.00
ROOF COVER	1	ASPHALT SHINGLE	1.00
FLOOR COVER	1	HARDWOOD	1.00
INT. FINISH	2	DRYWALL	1.00
HEATING/COOLING	2	HOT WATER	1.02
FUEL SOURCE	1	OIL	1.00

S	BAT	T	DESCRIPTION	UNITS	YB	ADJ PRICE	RCN
A	LLF	L	LOWER LEVEL FIN	681	1978	265.72	180,955
B	LLU	N	LOWER LEVEL UNF	168		202.46	34,013
+	WDK	N	ATT WOOD DECK	853		58.64	50,018
+	BAS	L	BAS AREA	1,089	1978	395.15	430,318
F	OPA	N	OPEN PORCH	14		182.68	2,558
	F12	O	FPL 1S 2OP	1		19,573.00	19,573

TOTAL RCN	721,634
CONDITION ELEM	CD

EFF.YR/AGE	1981 / 41	
COND	32	32 %
FUNC	0	
ECON	0	
DEPR	32	% GD 68
RCNLD		$490,700