Key: 2386

Town of TRURO - Fiscal Year 2024

9/27/2023 7:11 pm SEQ #: 2,441

LEGAL

CURRENT OWNER	PARCEL ID	LOCATION
MELINDA S A KRASTING LIV TRST TRS: KRASTING MELINDA S ASMAN PO BOX 406 TRURO, MA 02666-0406	46-164-0	4 SCRIMSHAW ST

TRANSFER HISTORY	DOS	T	SALE PRICE	BK-PG (Cert)
MELINDA S A KRASTING LIV	05/12/2016	F		29644-146
KRASTING MELINDA ASMAN	04/18/2013	QS	610,000	27304-88
WATSON STEPHEN R &	12/05/2005	99		20537-98

CLASS	CLASS%	DESCRIPTION	BN ID	BN	CARD
1010	100	SINGLE FAMILY		1	1 of 1

PMT NO	PMT DT	TY	DESC	AMOUNT	INSP	BY	1st	%
23-300	08/08/2023	3	REPAIR/REMOD	60,000			0	0
21-289	08/23/2021	9	DECK	40,000	08/04/2022	LG	100	100
21-116	04/05/2021	70	POOL	50,000	08/04/2022	LG	100	100
18-345	10/02/2018	3	REPAIR/REMOD	40,000	03/21/2019	LG	100	100
FY2019		35	RES EXEMPT		09/17/2018		0	0

LAND

CD	T	AC/SF/UN	Nbhd	Infl1	Infl2	ADJ BASE	SAF	Infl3	Lpi	VC	CREDIT AMT	ADJ VALUE
100	A	0.540	12 1.00	1 1.00	1 1.00	414,115	1.28	1 1.00	V4 1.15			287,130

TOTAL	23,522 SF	ZONING	RES	FRNT	0
Nbhd	EAST TRURO	NOTE	7/8/2006 HAS 2ND FLR VIEW BETWEEN HILLS.		
Infl1	NO ADJ				
Infl2	NO ADJ				

ASSESSED	CURRENT	PREVIOUS
LAND	287,100	249,700
BUILDING	1,060,500	868,900
DETACHED	30,300	0
OTHER	0	0
TOTAL	**1,377,900**	**1,118,600**

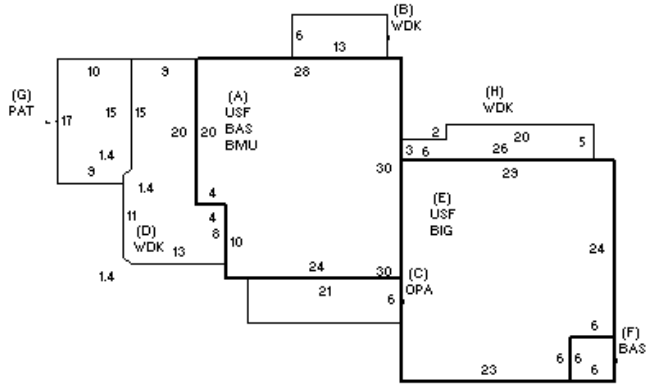

DETACHED

TY	QUAL	COND	DIM/NOTE	YB	UNITS	ADJ PRICE	RCNLD
SPG	E 1.80	E 1.00	12*15	2022	180	95.19	17,100
WDK	E 1.80	E 1.00	IRREG	2022	643	19.80	12,700
PTD	E 1.80	E 1.00	8*16	2022	128	4.14	500

PHOTO 08/04/2022

BUILDING

BUILDING	CD	ADJ	DESC
MODEL	1		RESIDENTIAL
STYLE	5	1.05	COLONIAL [100%]
QUALITY	G	1.35	GOOD [100%]
FRAME	1	1.00	WOOD FRAME [100%]

MEASURE	8/4/2022	LG
LIST	8/2/2022	LG
REVIEW	12/15/2010	MR

BLDG COMMENTS

Minisplit.

YEAR BLT	2006	SIZE ADJ	0.995
NET AREA	2,470	DETAIL ADJ	1.000
$NLA(RCN)	$488	OVERALL	1.070

CAPACITY	UNITS	ADJ
STORIES(FAR)	2	1.00
ROOMS	4	1.00
BEDROOMS	2	1.00
BATHROOMS	3	1.00
FIXTURES	10	$7,000
UNITS	0	1.00

ELEMENT	CD	DESCRIPTION	ADJ
FOUNDATION	4	BSMT WALL	1.00
EXT. COVER	1	WOOD SHINGLES	1.00
ROOF SHAPE	1	GABLE	1.00
ROOF COVER	1	ASPHALT SHINGLE	1.00
FLOOR COVER	1	HARDWOOD	1.00
INT. FINISH	2	DRYWALL	1.00
HEATING/COOLING	2	HOT WATER	1.02
FUEL SOURCE	1	OIL	1.00

S	BAT	T	DESCRIPTION	UNITS	YB	ADJ PRICE	RCN
A	BMU	N	BSMT UNFINISHED	800		109.43	87,545
A	BAS	L	BAS AREA	800	2006	436.58	349,266
A	USF	L	UP-STRY FIN	800	2006	315.86	252,691
+	WDK	N	ATT WOOD DECK	492		69.10	33,999
C	OPA	N	OPEN PORCH	126		112.11	14,126
E	BIG	N	BUILT-IN GARAGE	834		103.95	86,697
E	USF	L	UP-STRY FIN	834	2017	315.86	263,430
F	BAS	L	BAS AREA	36	2017	436.57	15,717
G	PAT	N	PATIO	169		23.90	4,039
	ELV	0	ELEVATOR	1		64,674.60	64,675
	GEN	O	GENERATOR	1		0.00	
	GFP	O	GAS FIREPLACE	2		12,975.75	25,952
	ODS	O	OUT DOOR SHOWER	1		0.00	

TOTAL RCN	1,205,133
CONDITION ELEM	CD
EFF.YR/AGE	2010 / 12
COND	12 12 %
FUNC	0
ECON	0
DEPR	12 % GD 88
RCNLD	$1,060,500