Key: 2497

Town of TRURO - Fiscal Year 2024

9/27/2023 7:11 pm SEQ #: 2,562

LEGAL

CURRENT OWNER	PARCEL ID	LOCATION
FIRST PARISH, LLC MGR: JANET POLSTEIN ET AL 13 MOUNT JOY AVENUE SCARSDALE, NY 01583	46-280-0	4 FIRST PARISH LN

TRANSFER HISTORY	DOS	T	SALE PRICE	BK-PG (Cert)
FIRST PARISH, LLC	06/02/2020	F	1	32955-266
POLSTEIN ROBERT & LYNN LI	09/21/2007	99		22352-87
POLSTEIN ROBERT & LYNN	05/11/2006	99		20990-7

CLASS	CLASS%	DESCRIPTION	BN ID	BN	CARD
1010	100	SINGLE FAMILY		1	1 of 1

PMT NO	PMT DT	TY	DESC	AMOUNT	INSP	BY	1st	%
93-135	11/05/1993	10	ALL OTHERS	20,000	06/01/1994		100	100
90-125	10/17/1990	3	REPAIR/REMOD	12,000	05/06/1991		100	100

LAND

CD	T	AC/SF/UN	Nbhd		Infl1		Infl2		ADJ BASE	SAF	Infl3		Lpi		VC	CREDIT AMT	ADJ VALUE
100	A	0.775	14	1.00	1	1.00	1	1.00	414,115	1.00	1	1.00	R03	1.15			320,940
300	A	1.065	14	1.00	1	1.00	1	1.00	31,625	1.00	1	1.00	R03	1.15			33,680

TOTAL	1.840 Acres	ZONING	RES	FRNT	0
Nbhd	TRURO CENTER	NOTE	INCL FORMER PCL 46-303 (WAS ON MAP ONLY). ALSO SHOWN AS 2 LOTS ON PLAN 267-19=COMBINED BY ZONING. FY09 ACREAGE CHG (SEE TRANSFER NOTE).		
Infl1	NO ADJ				
Infl2	NO ADJ				

ASSESSED	CURRENT	PREVIOUS
LAND	354,600	268,100
BUILDING	333,900	288,000
DETACHED	600	600
OTHER	0	0
TOTAL	**689,100**	**556,700**

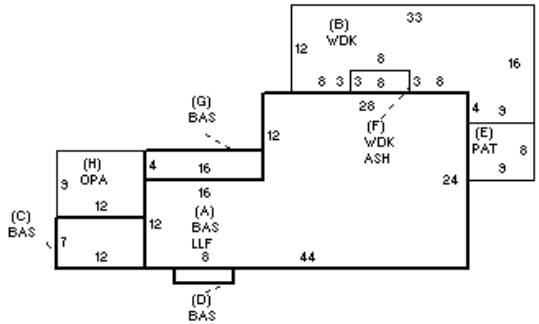

DETACHED

TY	QUAL		COND		DIM/NOTE	YB	UNITS	ADJ PRICE	RCNLD
SHF	A	1.00	A	0.75	6*8		48	17.17	600

PHOTO 08/24/2015

BLDG COMMENTS

BUILDING

BUILDING	CD	ADJ	DESC
MODEL	1		RESIDENTIAL
STYLE	2	1.00	RAISED RANCH [100%]
QUALITY	A	1.00	AVERAGE [100%]
FRAME	1	1.00	WOOD FRAME [100%]

MEASURE	8/24/2015	FC
LIST	8/24/2015	FC
REVIEW	11/29/2010	MR

YEAR BLT	1974	SIZE ADJ	1.010
NET AREA	1,892	DETAIL ADJ	1.000
$NLA(RCN)	$272	OVERALL	0.950

CAPACITY	UNITS	ADJ
STORIES(FAR)	1	1.00
ROOMS	6	1.00
BEDROOMS	3	1.00
BATHROOMS	3	1.00
FIXTURES	10	$7,000
UNITS	1	1.00

ELEMENT	CD	DESCRIPTION	ADJ
FOUNDATION	4	BSMT WALL	1.00
EXT. COVER	8	TEX PLYWOOD	1.00
ROOF SHAPE	1	GABLE	1.00
ROOF COVER	1	ASPHALT SHINGLE	1.00
FLOOR COVER	1	HARDWOOD	1.00
INT. FINISH	2	DRYWALL	1.00
HEATING/COOLING	5	ELECTRIC	0.95
FUEL SOURCE	3	ELECTRIC	1.00

S	BAT	T	DESCRIPTION	UNITS	YB	ADJ PRICE	RCN
A	LLF	L	LOWER LEVEL FIN	864	1974	192.29	166,140
+	WDK	N	ATT WOOD DECK	432		46.13	19,930
+	BAS	L	BAS AREA	1,028	1974	291.45	299,614
E	PAT	N	PATIO	72		21.83	1,572
F	ASH	N	ATT SHED	24		40.22	965
H	OPA	N	OPEN PORCH	108		74.84	8,083
	F11	O	FPL 1S 1OP	1		10,394.30	10,394

TOTAL RCN	513,699
CONDITION ELEM	CD

EFF.YR/AGE	1976 / 46	
COND	35	35 %
FUNC	0	
ECON	0	
DEPR	35	% GD 65
RCNLD		$333,900