Key: 2669

Town of TRURO - Fiscal Year 2024

9/27/2023 7:11 pm SEQ #: 2,743

LEGAL

CURRENT OWNER	PARCEL ID	LOCATION
KEANE NOMINEE TRUST TRS: CAMMIE WATSON PO BOX 730 TRURO, MA 02666-0730	47-95-0	6 SWALE WAY

TRANSFER HISTORY	DOS	T	SALE PRICE	BK-PG (Cert)
KEANE NOMINEE TRUST	01/30/2009	99		(176269+)
KEANE NOMINEE TRUST	03/30/2005	99		(176269)
KEANE WILLIAM G&NANCY CAM	03/30/2005	99		(176268)

CLASS	CLASS%	DESCRIPTION	BN ID	BN	CARD
1010	100	SINGLE FAMILY		1	1 of 2

PMT NO	PMT DT	TY	DESC	AMOUNT	INSP	BY	1st	%
FY2018		35	RES EXEMPT		10/01/2017		0	0
17-079X	03/27/2017	90	BP NVC	2,000	07/23/2018	JN	100	100
16-110	05/20/2016	8	BARN	7,000	03/07/2017	LG	100	100
14-045	04/01/2014	90	BP NVC	26,000	09/10/2014	FC	100	100
13-196	08/09/2013	2	ADDITION	5,000	11/19/2013	FC	100	100

LAND

CD	T	AC/SF/UN	Nbhd		Infl1		Infl2		ADJ BASE	SAF	Infl3		Lpi		VC	CREDIT AMT	ADJ VALUE
100	A	0.775	12	1.00	1	1.00	1	1.00	360,100	1.00	1	1.00	R05	1.00			279,080
300	A	0.435	12	1.00	1	1.00	1	1.00	27,500	1.00	1	1.00	R05	1.00			11,960

TOTAL	1.210 Acres	ZONING	RES	FRNT	0

Nbhd	EAST TRURO
Infl1	NO ADJ
Infl2	NO ADJ

NOTE

ASSESSED	CURRENT	PREVIOUS
LAND	291,000	253,100
BUILDING	640,000	519,700
DETACHED	9,400	9,000
OTHER	324,200	266,400
TOTAL	**1,264,600**	**1,048,200**

LLF (BR+FULL BATH+LAUNDRY RM) IN P/O SEC E+F; REST=BMU

2ND FLR=OPEN FIN LOFT+UNFIN ATTIC

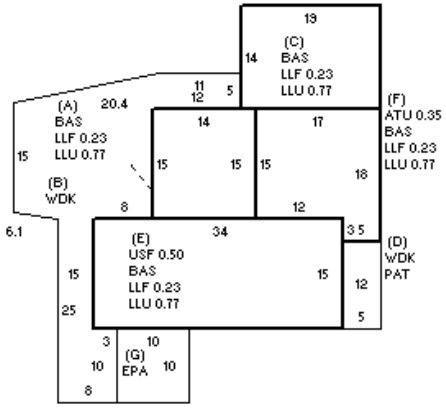

DETACHED

TY	QUAL		COND		DIM/NOTE	YB	UNITS	ADJ PRICE	RCNLD
STB	G	1.18	A	0.75	12*20	2016	240	18.05	3,200
ASH	A	1.00	A	0.75	AT STABLES 8	2016	96	11.79	800
OSH	A	1.00	A	0.75	GOATS 6*10	2016	60	6.90	300
SHF	G	1.18	G	0.90	10*14+12*16	1999	332	16.97	5,100

PHOTO 04/06/2021

BLDG COMMENTS

4/6/2021 Owner confirmed interior data at door (C-19).

BUILDING

BUILDING	CD	ADJ	DESC
MODEL	1		RESIDENTIAL
STYLE	4	1.10	CAPE [100%]
QUALITY	+	1.15	GOOD-/AVE+ [100%]
FRAME	1	1.00	WOOD FRAME [100%]

MEASURE	4/6/2021	LG
LIST	4/6/2021	LG
REVIEW	4/7/2021	MR

YEAR BLT	1974	SIZE ADJ	1.010
NET AREA	1,800	DETAIL ADJ	1.000
$NLA(RCN)	$515	OVERALL	1.120

CAPACITY	UNITS	ADJ
STORIES(FAR)	1.5	1.00
ROOMS	5	1.00
BEDROOMS	3	1.00
BATHROOMS	3	1.00
FIXTURES	10	$7,000
UNITS	0	1.00

ELEMENT	CD	DESCRIPTION	ADJ
FOUNDATION	4	BSMT WALL	1.00
EXT. COVER	1	WOOD SHINGLES	1.00
ROOF SHAPE	1	GABLE	1.00
ROOF COVER	1	ASPHALT SHINGLE	1.00
FLOOR COVER	2	SOFTWOOD	1.00
INT. FINISH	2	DRYWALL	1.00
HEATING/COOLING	2	HOT WATER	1.02
FUEL SOURCE	2	GAS	1.00

S	BAT	T	DESCRIPTION	UNITS	YB	ADJ PRICE	RCN
+	LLU	N	LOWER LEVEL UNF	967		194.95	188,521
+	LLF	L	LOWER LEVEL FIN	289	1974	270.74	78,243
+	BAS	L	BAS AREA	1,256	1974	391.28	491,443
+	WDK	N	ATT WOOD DECK	612		58.64	35,886
D	PAT	N	PATIO	60		29.60	1,776
E	USF	L	UP-STRY FIN	255	1974	312.59	79,711
F	ATU	N	UNFIN ATTIC	95		106.29	10,097
G	EPA	N	ENCL PORCH	100		207.50	20,750
	F11	O	FPL 1S 1OP	1		14,092.40	14,092
	ODS	O	OUT DOOR SHOWER	1		0.00	

TOTAL RCN	927,519

CONDITION ELEM	CD

EFF.YR/AGE	1984 / 38		
COND	31	31 %	
FUNC	0		
ECON	0		
DEPR	31	% GD	69
RCNLD	$640,000		

Key: 2669

Town of TRURO - Fiscal Year 2024

9/27/2023 7:11 pm SEQ #: 2,744

LEGAL

CURRENT OWNER	PARCEL ID	LOCATION
KEANE NOMINEE TRUST TRS: CAMMIE WATSON PO BOX 730 TRURO, MA 02666-0730	47-95-0	6 SWALE WAY

TRANSFER HISTORY	DOS	T	SALE PRICE	BK-PG (Cert)

CLASS	CLASS%	DESCRIPTION	BN ID	BN	CARD
1010	100	SINGLE FAMILY		2	2 of 2

PMT NO	PMT DT	TY	DESC	AMOUNT	INSP	BY	1st	%

LAND

CD	T	AC/SF/UN	Nbhd	Infl1	Infl2	ADJ BASE	SAF	Infl3	Lpi	VC	CREDIT AMT	ADJ VALUE

TOTAL		ZONING	FRNT
Nbhd		NOTE	
Infl1			
Infl2			

ASSESSED	CURRENT	PREVIOUS
LAND	324,200	
BUILDING		
DETACHED		
OTHER		
TOTAL		

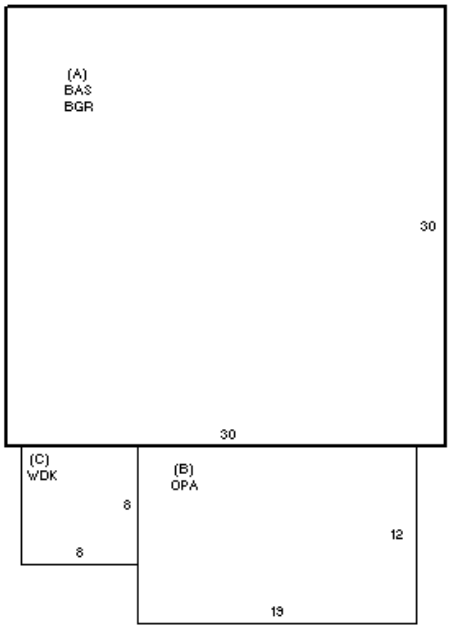

DETACHED

TY	QUAL	COND	DIM/NOTE	YB	UNITS	ADJ PRICE	RCNLD

PHOTO 04/06/2021

BUILDING

BUILDING	CD	ADJ	DESC
MODEL	1		RESIDENTIAL
STYLE	14	0.90	DET BLDG [100%]
QUALITY	+	1.15	GOOD-/AVE+ [100%]
FRAME	1	1.00	WOOD FRAME [100%]

MEASURE	4/6/2021	LG
LIST	4/6/2021	LG
REVIEW	12/15/2010	MR

BLDG COMMENTS

1-RM ART STUDIO (cammiewatson.com) W/ FULL BATH & UTILITY SINK (NO STOVE OR FRIDGE) +FULL BSMT (CAR/BOAT STORAGE)=ADDS 1 BR PER HEALTH AGENT.

YEAR BLT	2004	SIZE ADJ	1.050
NET AREA	900	DETAIL ADJ	1.050
$NLA(RCN)	$439	OVERALL	0.880

CAPACITY	UNITS	ADJ
STORIES(FAR)	1	1.00
ROOMS	1	1.00
BEDROOMS	1	1.00
BATHROOMS	1	1.00
FIXTURES	3	$2,100
UNITS	0	1.00

ELEMENT	CD	DESCRIPTION	ADJ
FOUNDATION	4	BSMT WALL	1.00
EXT. COVER	1	WOOD SHINGLES	1.00
ROOF SHAPE	1	GABLE	1.00
ROOF COVER	1	ASPHALT SHINGLE	1.00
FLOOR COVER	1	HARDWOOD	1.00
INT. FINISH	2	DRYWALL	1.00
HEATING/COOLING	7	FL./WALL FURN.	0.98
FUEL SOURCE	2	GAS	1.00

S	BAT	T	DESCRIPTION	UNITS	YB	ADJ PRICE	RCN
A	BGR	N	SF BSMT GARAGE	900		89.36	80,428
A	BAS	L	BAS AREA	900	2004	322.77	290,494
B	OPA	N	OPEN PORCH	228		74.60	17,008
C	WDK	N	ATT WOOD DECK	64		83.02	5,313

TOTAL RCN	395,343

CONDITION ELEM	CD

EFF.YR/AGE	2004 / 18	
COND	18	18 %
FUNC	0	
ECON	0	
DEPR	18	% GD 82
RCNLD		$324,200