Key: 2674

Town of TRURO - Fiscal Year 2024

9/27/2023 7:11 pm SEQ #: 2,749

LEGAL

CURRENT OWNER	PARCEL ID	LOCATION
JAMES WILLIAM FLANDERS JR TR TRS: FLANDERS JAMES WILLIAM JR c/o JOHN FLANDERS 2323 S BENTLEY AVE #301 LOS ANGELES, CA 91364	47-100-0	6 AVERY HILL WAY

TRANSFER HISTORY	DOS	T	SALE PRICE	BK-PG (Cert)
JAMES WILLIAM FLANDERS J	01/23/2009	G		(119336+)
FLANDERS J WILLIAM JR & J	08/15/2002	99		(166267+)
FLANDERS J WILLIAM JR & C	12/20/1989	99		(119336)

CLASS	CLASS%	DESCRIPTION	BN ID	BN	CARD
1010	100	SINGLE FAMILY		1	1 of 1

PMT NO	PMT DT	TY	DESC	AMOUNT	INSP	BY	1st	%
19-419X	12/30/2019	90	BP NVC	11,861	06/22/2020	LG	100	100
05-016	02/04/2005	7	GARAGE	55,000	03/29/2006	WL	100	100
04-219	12/13/2004	7	GARAGE	55,000	12/31/2005		100	100
		30	CHECK DATA		11/29/2001	BTT	100	100
01-046	03/27/2001	9	DECK	5,000	11/28/2001	BTT	100	100

LAND

CD	T	AC/SF/UN	Nbhd	Infl1	Infl2	ADJ BASE	SAF	Infl3	Lpi	VC	CREDIT AMT	ADJ VALUE
100	A	0.775	12 1.00	1 1.00	1 1.00	360,100	1.00	1 1.00	R05 1.00			279,080
300	A	0.145	12 1.00	1 1.00	1 1.00	27,500	1.00	1 1.00	R05 1.00			3,990

TOTAL	40,075 SF	ZONING	RES	FRNT	0

Nbhd	EAST TRURO
Infl1	NO ADJ
Infl2	NO ADJ

NOTE

ASSESSED	CURRENT	PREVIOUS
LAND	283,100	246,100
BUILDING	392,700	333,300
DETACHED	32,100	30,600
OTHER	0	0
TOTAL	**707,900**	**610,000**

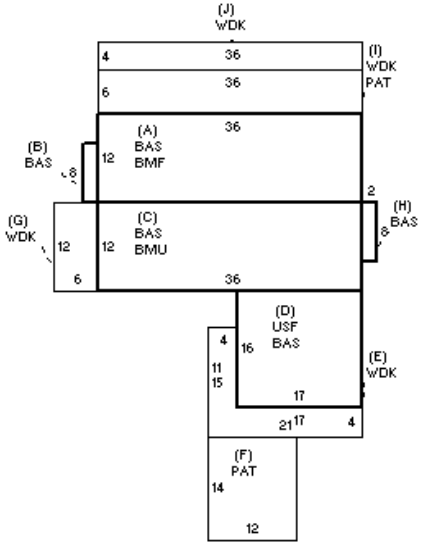

DETACHED

TY	QUAL	COND	DIM/NOTE	YB	UNITS	ADJ PRICE	RCNLD
GUS	G 1.18	G 0.90	24*20	2005	480	74.36	32,100

PHOTO 04/06/2021

BLDG COMMENTS

BUILDING

BUILDING	CD	ADJ	DESC
MODEL	1		RESIDENTIAL
STYLE	5	1.05	COLONIAL [100%]
QUALITY	A	1.00	AVERAGE [100%]
FRAME	1	1.00	WOOD FRAME [100%]

MEASURE	4/6/2021	LG
LIST	12/30/2015	EST
REVIEW	12/15/2010	MR

YEAR BLT	1977	SIZE ADJ	1.030
NET AREA	1,440	DETAIL ADJ	1.000
$NLA(RCN)	$401	OVERALL	1.010

CAPACITY	UNITS	ADJ
STORIES(FAR)	1	1.00
ROOMS	0	1.00
BEDROOMS	4	1.00
BATHROOMS	2	1.00
FIXTURES	6	$4,200
UNITS	1	1.00

ELEMENT	CD	DESCRIPTION	ADJ
FOUNDATION	4	BSMT WALL	1.00
EXT. COVER	1	WOOD SHINGLES	1.00
ROOF SHAPE	1	GABLE	1.00
ROOF COVER	2	WOOD SHINGLES	1.01
FLOOR COVER	2	SOFTWOOD	1.00
INT. FINISH	4	WALL BOARD	1.00
HEATING/COOLING	5	ELECTRIC	0.95
FUEL SOURCE	3	ELECTRIC	1.00

S	BAT	T	DESCRIPTION	UNITS	YB	ADJ PRICE	RCN
A	BMF	N	BSMT FINISH	432		148.63	64,207
+	BAS	L	BAS AREA	1,168	1977	316.00	369,085
C	BMU	N	BSMT UNFINISHED	432		84.98	36,712
D	USF	L	UP-STRY FIN	272	1977	249.98	67,994
+	WDK	N	ATT WOOD DECK	560		46.89	26,259
+	PAT	N	PATIO	384		15.47	5,942
	MST	O	MASONRY STACK	1		3,130.30	3,130
	ODS	O	OUT DOOR SHOWER	1		0.00	

TOTAL RCN	577,530

CONDITION ELEM	CD

EFF.YR/AGE	1981 / 41	
COND	32	32 %
FUNC	0	
ECON	0	
DEPR	32	% GD 68
RCNLD		$392,700