**Key: 3425**

# Town of TRURO - Fiscal Year 2024

9/27/2023 7:11 pm SEQ #: 3.555

## LEGAL

| CURRENT OWNER | PARCEL ID | LOCATION |
|---|---|---|
| BLUM FAMILY CAPE COD NOM TRUST<br>TRS: BLUM CAROLYN P ET AL<br>149 PROSPECT ST<br>CAMBRIDGE, MA 02139 | 58-38-0 | 25 STURDY WAY |

| TRANSFER HISTORY | DOS | T | SALE PRICE | BK-PG (Cert) |
|---|---|---|---|---|
| BLUM FAMILY CAPE COD NOM | 10/30/2002 | 99 | | 15825-196 |
| BLUM CAROLYN PATTY &JEFFR | 03/05/2002 | 99 | | 14893-262 |
| FEINBLATT LOIS B QUAL RES | 01/11/1993 | 99 | | 3400-129 |

| CLASS | CLASS% | DESCRIPTION | BN ID | BN | CARD |
|---|---|---|---|---|---|
| 1010 | 100 | SINGLE FAMILY | | 1 | 1 of 1 |

| PMT NO | PMT DT | TY | DESC | AMOUNT | INSP | BY | 1st | % |
|---|---|---|---|---|---|---|---|---|
| 02-171 | 08/15/2002 | 1 | SINGLE FAM R | 462,000 | 04/04/2004 | BT | 100 | 100 |
| 02-101 | 05/22/2002 | 5 | DEMO | 6,200 | 05/16/2003 | BT | 100 | 100 |
| NONE | 01/01/2002 | 30 | CHECK DATA | | | | 100 | 100 |

## LAND

| CD | T | AC/SF/UN | Nbhd | | Infl1 | | Infl2 | | ADJ BASE | SAF | Infl3 | | Lpi | | VC | CREDIT AMT | ADJ VALUE |
|---|---|---|---|---|---|---|---|---|---|---|---|---|---|---|---|---|---|
| 100 | A | 0.775 | 15 | 1.00 | ER7 | 0.95 | 1 | 1.00 | 2,394,665 | 1.00 | 1 | 1.00 | WF2 | 7.00 | | | 1,855,870 |
| 300 | A | 1.945 | 15 | 1.00 | 1 | 1.00 | 1 | 1.00 | 192,500 | 1.00 | 1 | 1.00 | WF2 | 7.00 | | | 374,410 |

| TOTAL | 2.720 Acres | ZONING | RES | FRNT | 0 |
|---|---|---|---|---|---|
| Nbhd | SOUTH TRURO | NOTE | DEED RESTRICTION PROHIBITS SUBDIVISION PER BK 15825/196. | | |
| Infl1 | EROSION | | | | |
| Infl2 | NO ADJ | | | | |

| ASSESSED | CURRENT | PREVIOUS |
|---|---|---|
| LAND | 2,230,300 | 1,939,000 |
| BUILDING | 1,422,400 | 1,177,000 |
| DETACHED | 0 | 0 |
| OTHER | 0 | 0 |
| TOTAL | **3,652,700** | **3,116,000** |

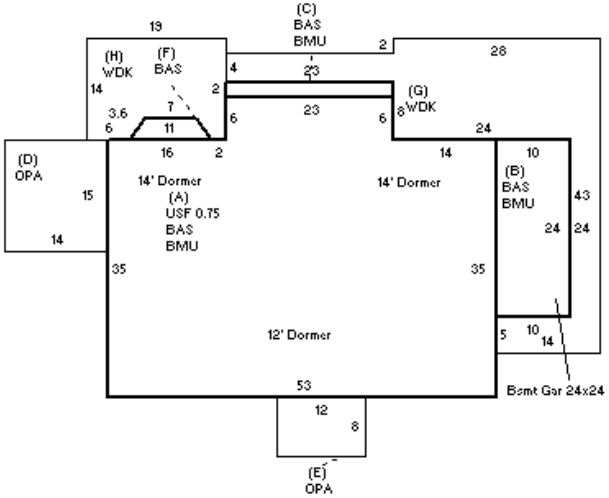


## DETACHED

| TY | QUAL | COND | DIM/NOTE | YB | UNITS | ADJ PRICE | RCNLD |
|---|---|---|---|---|---|---|---|
| BCH | SV 1.00 | SV 1.00 | | | 1 | 0.00 | |

PHOTO 07/17/2019

BLDG COMMENTS

## BUILDING

| BUILDING | CD | ADJ | DESC |
|---|---|---|---|
| MODEL | 1 | | RESIDENTIAL |
| STYLE | 4 | 1.10 | CAPE [100%] |
| QUALITY | G | 1.35 | GOOD [100%] |
| FRAME | 1 | 1.00 | WOOD FRAME [100%] |

| MEASURE | 7/17/2019 | LG |
|---|---|---|
| LIST | 7/17/2019 | LG |
| REVIEW | 12/13/2010 | MR |

| YEAR BLT | 2002 | SIZE ADJ | 0.975 |
|---|---|---|---|
| NET AREA | 3,801 | DETAIL ADJ | 1.000 |
| $NLA(RCN) | $468 | OVERALL | 1.120 |

| CAPACITY | UNITS | ADJ |
|---|---|---|
| STORIES(FAR) | 0 | 1.00 |
| ROOMS | 9 | 1.00 |
| BEDROOMS | 5 | 1.00 |
| BATHROOMS | 4.5 | 1.00 |
| FIXTURES | 15 | $10,500 |
| UNITS | 0 | 1.00 |

| ELEMENT | CD | DESCRIPTION | ADJ |
|---|---|---|---|
| FOUNDATION | 4 | BSMT WALL | 1.00 |
| EXT. COVER | 1 | WOOD SHINGLES | 1.00 |
| ROOF SHAPE | 1 | GABLE | 1.00 |
| ROOF COVER | 1 | ASPHALT SHINGLE | 1.00 |
| FLOOR COVER | 1 | HARDWOOD | 1.00 |
| INT. FINISH | 1 | PLASTER | 1.00 |
| HEATING/COOLING | 2 | HOT WATER | 1.02 |
| FUEL SOURCE | 2 | GAS | 1.00 |

| S | BAT | T | DESCRIPTION | UNITS | YB | ADJ PRICE | RCN |
|---|---|---|---|---|---|---|---|
| + | BMU | N | BSMT UNFINISHED | 2,279 | | 82.69 | 188,459 |
| A | USF | L | UP-STRY FIN | 1,495 | 2002 | 331.10 | 494,992 |
| + | OPA | N | OPEN PORCH | 306 | | 97.74 | 29,909 |
| + | BAS | L | BAS AREA | 2,306 | 2002 | 412.68 | 951,630 |
| + | WDK | N | ATT WOOD DECK | 889 | | 66.45 | 59,074 |
| | BMG | O | BSMT GARAGE | 2 | | 10,645.95 | 21,292 |
| | F21 | O | FPL 2S 1OP | 1 | | 22,180.80 | 22,181 |

| TOTAL RCN | 1,778,036 |
|---|---|
| CONDITION ELEM | CD |

| EFF.YR/AGE | 2002 / 20 | |
|---|---|---|
| COND | 20 | 20 % |
| FUNC | 0 | |
| ECON | 0 | |
| DEPR | 20 | % GD 80 |
| RCNLD | | $1,422,400 |