Key: 3476

Town of TRURO - Fiscal Year 2024

9/27/2023 7:11 pm SEQ #: 3,613

LEGAL

CURRENT OWNER	PARCEL ID	LOCATION
FRADER MARC A & C/O HF HOLDING TRUST 4401 SYMMES CIRCLE ARLINGTON, MA 02474	59-21-0	3 BRIAR RD

TRANSFER HISTORY	DOS	T	SALE PRICE	BK-PG (Cert)
HF HOLDING TRUST	03/15/2023	F	10	(232483)
FRADER MARC A &	05/30/2008	O	787,500	(186106+)
POSTER MARK F & ANNE T	07/17/1985	99		(102561+)

CLASS	CLASS%	DESCRIPTION	BN ID	BN	CARD
1010	100	SINGLE FAMILY		1	1 of 1

PMT NO	PMT DT	TY	DESC	AMOUNT	INSP	BY	1st	%
22-467X	11/28/2022	4	REHAB	19,900	03/17/2023	LG	100	100
10-265	12/27/2010	10	ALL OTHERS	50,000	02/29/2012	FC	100	100
09-022	02/10/2009	3	REPAIR/REMOD	125,000	06/01/2010	JH	100	100

LAND

CD	T	AC/SF/UN	Nbhd		Infl1		Infl2		ADJ BASE	SAF	Infl3		Lpi		VC	CREDIT AMT	ADJ VALUE
100	A	0.775	15	1.00	1	1.00	1	1.00	990,275	1.00	1	1.00	V9	2.75			767,460
300	A	0.075	15	1.00	1	1.00	1	1.00	75,625	1.00	1	1.00	V9	2.75			5,670

TOTAL	37,026 SF	ZONING	RES	FRNT	0
Nbhd	SOUTH TRURO	NOTE			
Infl1	NO ADJ				
Infl2	NO ADJ				

ASSESSED	CURRENT	PREVIOUS
LAND	773,100	488,900
BUILDING	533,900	411,600
DETACHED	0	0
OTHER	0	0
TOTAL	**1,307,000**	**900,500**

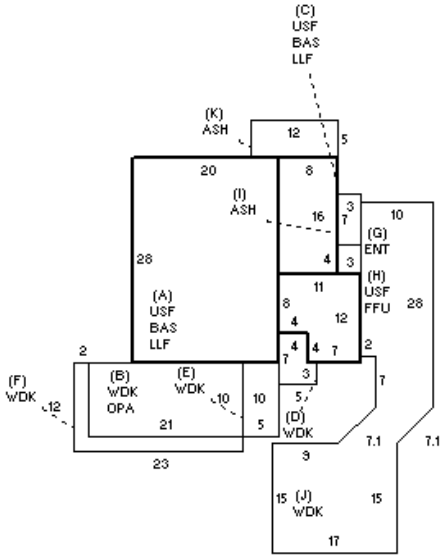

DETACHED

TY	QUAL	COND	DIM/NOTE	YB	UNITS	ADJ PRICE	RCNLD

PHOTO 03/17/2023

BUILDING

BUILDING	CD	ADJ	DESC
MODEL	1		RESIDENTIAL
STYLE	5	1.05	COLONIAL [100%]
QUALITY	+	1.15	GOOD-/AVE+ [100%]
FRAME	1	1.00	WOOD FRAME [100%]

MEASURE	3/17/2023	LG
LIST	9/2/2014	FC
REVIEW	4/5/2021	MR

BLDG COMMENTS

Minisplit

YEAR BLT	1985	SIZE ADJ	0.995
NET AREA	2,296	DETAIL ADJ	1.000
$NLA(RCN)	$332	OVERALL	1.050

CAPACITY	UNITS	ADJ
STORIES(FAR)	2	1.00
ROOMS	7	1.00
BEDROOMS	4	1.00
BATHROOMS	2.5	1.00
FIXTURES	9	$6,300
UNITS	1	1.00

ELEMENT	CD	DESCRIPTION	ADJ
FOUNDATION	4	BSMT WALL	1.00
EXT. COVER	1	WOOD SHINGLES	1.00
ROOF SHAPE	1	GABLE	1.00
ROOF COVER	1	ASPHALT SHINGLE	1.00
FLOOR COVER	3	W/W CARPET	1.00
INT. FINISH	2	DRYWALL	1.00
HEATING/COOLING	18	MINISPLIT	1.00
FUEL SOURCE	3	ELECTRIC	1.00

S	BAT	T	DESCRIPTION	UNITS	YB	ADJ PRICE	RCN
+	LLF	L	LOWER LEVEL FIN	688	1985	245.41	168,844
+	BAS	L	BAS AREA	688	1985	364.95	251,086
+	USF	L	UP-STRY FIN	804	1985	281.45	226,285
B	OPA	N	OPEN PORCH	210		84.34	17,712
+	WDK	N	ATT WOOD DECK	918		54.16	49,715
G	ENT	N	ENCL ENTRY	12		299.97	3,600
H	FFU	L	BAS AREA UNFIN	116	1985	147.06	17,058
+	ASH	N	ATT SHED	81		50.34	4,078
	F21	O	FPL 2S 1OP	1		18,077.20	18,077
	ODS	O	OUT DOOR SHOWER	1		0.00	

TOTAL RCN	762,755
CONDITION ELEM	CD

EFF.YR/AGE	1992 / 30	
COND	30	30 %
FUNC	0	
ECON	0	
DEPR	30	% GD 70
RCNLD		$533,900