Key: 833

Town of TRURO - Fiscal Year 2024

9/27/2023 7:11 pm SEQ #: 772

LEGAL

CURRENT OWNER	PARCEL ID	LOCATION
FLYNN NORTH TRURO IRR 2021 TR TRS: SEAN M FLYNN 504 GRAFTON ST SHREWSBURY, MA 01545	35-82-0	24 PILGRIMS PATH

TRANSFER HISTORY	DOS	T	SALE PRICE	BK-PG (Cert)
FLYNN NORTH TRURO IRR 202	07/06/2021	F	100	(226845)
FLYNN EDWARD R JR & JOYCE	05/13/1985	99		(101486)

CLASS	CLASS%	DESCRIPTION	BN ID	BN	CARD
1010	100	SINGLE FAMILY		1	1 of 1

PMT NO	PMT DT	TY	DESC	AMOUNT	INSP	BY	1st	%
15-189	07/24/2015	90	BP NVC	7,000			100	100
07-204	09/18/2007	2	ADDITION	270,000	05/17/2010	JH	100	100

LAND

CD	T	AC/SF/UN	Nbhd	Infl1	Infl2	ADJ BASE	SAF	Infl3	Lpi	VC	CREDIT AMT	ADJ VALUE
100	A	0.775	11 1.00	1 1.00	1 1.00	2,520,700	1.00	1 1.00	WF2 7.00			1,953,540
300	A	0.675	11 1.00	1 1.00	1 1.00	192,500	1.00	1 1.00	WF2 7.00			129,940

TOTAL	1.450 Acres	ZONING	RES	FRNT	0
Nbhd	NORTH TRURO	NOTE	INCL FORMER PCL 35-83.		
Infl1	NO ADJ				
Infl2	NO ADJ				

ASSESSED	CURRENT	PREVIOUS
LAND	2,083,500	1,811,500
BUILDING	1,583,700	1,312,200
DETACHED	2,400	2,300
OTHER	0	0
TOTAL	**3,669,600**	**3,126,000**

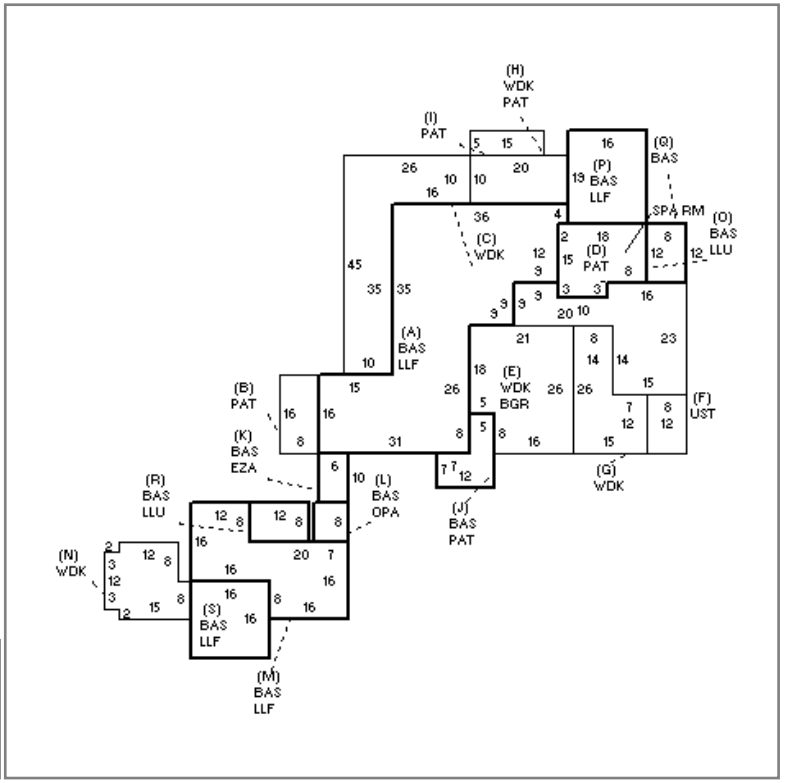

DETACHED

TY	QUAL	COND	DIM/NOTE	YB	UNITS	ADJ PRICE	RCNLD
HTB	A 1.00	A- 0.70			1	2,730.40	1,900
BCH	SV 1.00	SV 1.00			1	0.00	
WDK	G 1.18	E 1.00	5*8		40	12.98	500

PHOTO 12/28/2016

BLDG COMMENTS

BUILDING

BUILDING	CD	ADJ	DESC
MODEL	1		RESIDENTIAL
STYLE	8	1.10	CONTEMPORARY [100%]
QUALITY	G	1.35	GOOD [100%]
FRAME	1	1.00	WOOD FRAME [100%]

MEASURE	12/28/2016	LG
LIST	8/23/2010	JH
REVIEW	4/6/2021	MR

YEAR BLT	1988	SIZE ADJ	0.950
NET AREA	5,624	DETAIL ADJ	1.000
$NLA(RCN)	$397	OVERALL	1.100

CAPACITY	UNITS	ADJ
STORIES(FAR)	1	1.00
ROOMS	9	1.00
BEDROOMS	5	1.00
BATHROOMS	4	1.00
FIXTURES	17	$11,900
UNITS	0	1.00

ELEMENT	CD	DESCRIPTION	ADJ
FOUNDATION	4	BSMT WALL	1.00
EXT. COVER	1	WOOD SHINGLES	1.00
ROOF SHAPE	1	GABLE	1.00
ROOF COVER	1	ASPHALT SHINGLE	1.00
FLOOR COVER	3	W/W CARPET	1.00
INT. FINISH	2	DRYWALL	1.00
HEATING/COOLING	1	FORCED AIR	1.00
FUEL SOURCE	1	OIL	1.00

S	BAT	T	DESCRIPTION	UNITS	YB	ADJ PRICE	RCN
+	LLF	L	LOWER LEVEL FIN	2,473	1988	255.54	631,951
+	PAT	N	PATIO	1,022		18.52	18,924
+	WDK	N	ATT WOOD DECK	1,860		63.59	118,277
E	BGR	N	SF BSMT GARAGE	506		134.42	68,018
F	UST	N	UTILITY STORAGE	96		152.92	14,680
K	EZA	N	ENCL BRZWAY	60		188.36	11,302
+	BAS	L	BAS AREA	596	2008	394.91	235,368
L	OPA	N	OPEN PORCH	56		143.04	8,010
+	LLU	N	LOWER LEVEL UNF	342		219.55	75,087
+	BAS	L	BAS AREA	2,555	1988	394.91	1,009,005
	F11	O	FPL 1S 1OP	1		15,282.70	15,283
	GFP	O	GAS FIREPLACE	1		12,736.30	12,736

TOTAL RCN	2,230,542
CONDITION ELEM	CD

EFF.YR/AGE	1993 / 29	
COND	29	29 %
FUNC	0	
ECON	0	
DEPR	29	% GD 71
RCNLD		$1,583,700