Key: **869**

Town of TRURO - Fiscal Year 2024

9/27/2023 7:11 pm SEQ #: 809

LEGAL

CURRENT OWNER	PARCEL ID	LOCATION
ROBT M SEDGWICK JR REV TRST & **HELEN TORELLI REVOC TRUST** **24 HIGHLAND AVE** **SHORT HILLS, NJ 07078-2810**	**35-119-0**	**9 TWINE FIELD RD**

TRANSFER HISTORY	DOS	T	SALE PRICE	BK-PG (Cert)
ROBT M SEDGWICK JR REV TR	06/06/2019	F	100	(219617)
SEDGWICK ROBERT &	09/23/2011	QS	1,175,000	(195248)
COWAN JOHN J &	07/22/1998	QS	149,000	(149450)

CLASS	CLASS%	DESCRIPTION	BN ID	BN	CARD
1010	**100**	**SINGLE FAMILY**		**1**	**1 of 1**

PMT NO	PMT DT	TY	DESC	AMOUNT	INSP	BY	1st	%
12-024	02/15/2012	3	REPAIR/REMOD	59,000	12/20/2012	FC	100	100
05-047	04/25/2005	1	SINGLE FAM R	645,000	12/07/2006	FC	100	100

LAND

CD	T	AC/SF/UN	Nbhd		Infl1		Infl2		ADJ BASE	SAF	Infl3		Lpi		VC	CREDIT AMT	ADJ VALUE
100	A	0.775	11	1.00	1	1.00	1	1.00	900,250	1.00	1	1.00	V9	2.50			697,690
300	A	0.005	11	1.00	1	1.00	1	1.00	68,750	1.00	1	1.00	V9	2.50			340

TOTAL	33,977 SF	ZONING	RES	FRNT	0
Nbhd	NORTH TRURO	NOTE			
Infl1	NO ADJ				
Infl2	NO ADJ				

ASSESSED	CURRENT	PREVIOUS
LAND	698,000	606,900
BUILDING	1,559,000	1,338,200
DETACHED	0	0
OTHER	0	0
TOTAL	**2,257,000**	**1,945,100**

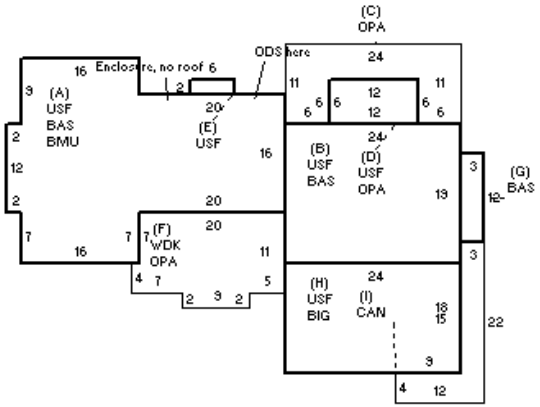

DETACHED

TY	QUAL	COND	DIM/NOTE	YB	UNITS	ADJ PRICE	RCNLD

PHOTO 09/15/2021

BUILDING

BUILDING	CD	ADJ	DESC
MODEL	1		RESIDENTIAL
STYLE	16	1.30	NEW STYLE [100%]
QUALITY	V	1.55	VERY GOOD [100%]
FRAME	1	1.00	WOOD FRAME [100%]

MEASURE	9/15/2021	LG
LIST	9/15/2021	LG
REVIEW	6/25/2012	BE

BLDG COMMENTS

9/15/2021 Owner confirmed interior data at door (per C-19), BMU unfinished.

YEAR BLT	2005	SIZE ADJ	0.985
NET AREA	2,976	DETAIL ADJ	1.000
$NLA(RCN)	$624	OVERALL	1.330

CAPACITY	UNITS	ADJ
STORIES(FAR)	2	1.00
ROOMS	6	1.00
BEDROOMS	3	1.00
BATHROOMS	3.5	1.00
FIXTURES	12	$8,400
UNITS	0	1.00

ELEMENT	CD	DESCRIPTION	ADJ
FOUNDATION	4	BSMT WALL	1.00
EXT. COVER	1	WOOD SHINGLES	1.00
ROOF SHAPE	1	GABLE	1.00
ROOF COVER	1	ASPHALT SHINGLE	1.00
FLOOR COVER	1	HARDWOOD	1.00
INT. FINISH	2	DRYWALL	1.00
HEATING/COOLING	9	WARM/COOL AIR	1.03
FUEL SOURCE	2	GAS	1.00

S	BAT	T	DESCRIPTION	UNITS	YB	ADJ PRICE	RCN
A	BMU	N	BSMT UNFINISHED	792		154.60	122,446
+	BAS	L	BAS AREA	1,248	2005	610.75	762,220
+	OPA	N	OPEN PORCH	506		118.79	60,107
+	USF	L	UP-STRY FIN	1,692	2005	446.25	755,054
F	WDK	N	ATT WOOD DECK	242		109.84	26,580
G	BAS	L	BAS AREA	36	2012	610.75	21,987
H	BIG	N	BUILT-IN GARAGE	360		163.94	59,019
I	CAN	N	CANOPY	102		94.02	9,590
	F21	O	FPL 2S 1OP	1		30,552.10	30,552
	ODS	O	OUT DOOR SHOWER	1		0.00	

TOTAL RCN	1,855,956
CONDITION ELEM	CD

EFF.YR/AGE	2006 / 16	
COND	16	16 %
FUNC	0	
ECON	0	
DEPR	16	% GD 84
RCNLD		$1,559,000