Key: 885

Town of TRURO - Fiscal Year 2024

9/27/2023 7:11 pm SEQ #: 826

LEGAL

CURRENT OWNER	PARCEL ID	LOCATION
DANIEL RUBERMAN TRUST & **ANN C BORST TRUST** **31 GLEN ROAD** **BROOKLINE, MA 02445**	**35-139-0**	**4 FLORENCE WAY**

TRANSFER HISTORY	DOS	T	SALE PRICE	BK-PG (Cert)
DANIEL RUBERMAN TRUST &	08/24/2015	A		(207189)
RUBERMAN DANIEL & BORST A	06/16/2003	QS	418,000	(169512)
MILLER KEITH &	07/24/2000	QS	249,000	(158462)

CLASS	CLASS%	DESCRIPTION	BN ID	BN	CARD
1010	**100**	**SINGLE FAMILY**		**1**	**1 of 1**

PMT NO	PMT DT	TY	DESC	AMOUNT	INSP	BY	1st	%
04-134	08/10/2004	1	SINGLE FAM R	350,000	06/28/2006	FC	100	100

LAND

CD	T	AC/SF/UN	Nbhd		Infl1		Infl2		ADJ BASE	SAF	Infl3		Lpi		VC	CREDIT AMT	ADJ VALUE
100	A	0.775	11	1.00	1	1.00	1	1.00	630,175	1.00	1	1.00	V7	1.75			488,390
300	A	2.355	11	1.00	1	1.00	1	1.00	48,125	1.00	1	1.00	V7	1.75			113,330

TOTAL	3.130 Acres	ZONING	RES	FRNT	0
Nbhd	NORTH TRURO	NOTE	DEED RESTRICTION (DOC 338141) PROHIBITS SUBDIVISION.		
Infl1	NO ADJ				
Infl2	NO ADJ				

ASSESSED	CURRENT	PREVIOUS
LAND	601,700	523,100
BUILDING	904,800	743,900
DETACHED	0	0
OTHER	0	0
TOTAL	**1,506,500**	**1,267,000**

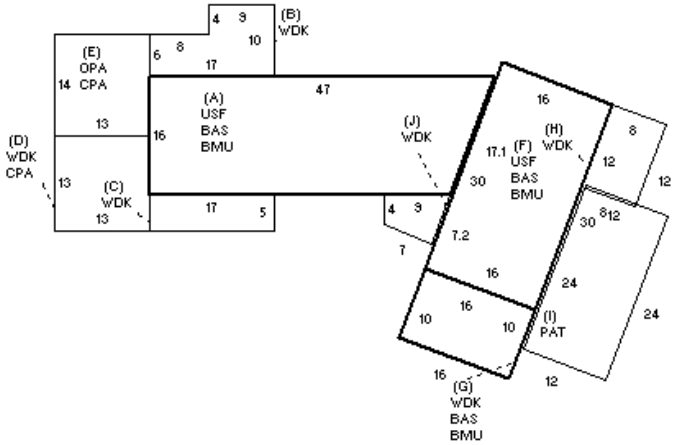

DETACHED

TY	QUAL	COND	DIM/NOTE	YB	UNITS	ADJ PRICE	RCNLD

PHOTO 06/23/2022

BUILDING

BUILDING	CD	ADJ	DESC
MODEL	1		RESIDENTIAL
STYLE	8	1.10	CONTEMPORARY [100%]
QUALITY	+	1.15	GOOD-/AVE+ [100%]
FRAME	1	1.00	WOOD FRAME [100%]

MEASURE	6/23/2022	LG
LIST	7/5/2022	LG
REVIEW	11/15/2010	MR

BLDG COMMENTS

FPL HAS METAL CHIMNEY.

YEAR BLT	2005	SIZE ADJ	0.990
NET AREA	2,528	DETAIL ADJ	1.000
$NLA(RCN)	$431	OVERALL	1.120

CAPACITY	UNITS	ADJ
STORIES(FAR)	2	1.00
ROOMS	7	1.00
BEDROOMS	4	1.00
BATHROOMS	3.5	1.00
FIXTURES	14	$9,800
UNITS	0	1.00

ELEMENT	CD	DESCRIPTION	ADJ
FOUNDATION	4	BSMT WALL	1.00
EXT. COVER	2	CLAPBOARD	1.00
ROOF SHAPE	4	FLAT/SHED	1.00
ROOF COVER	7	ROLL	1.00
FLOOR COVER	1	HARDWOOD	1.00
INT. FINISH	2	DRYWALL	1.00
HEATING/COOLING	2	HOT WATER	1.02
FUEL SOURCE	1	OIL	1.00

S	BAT	T	DESCRIPTION	UNITS	YB	ADJ PRICE	RCN
+	BMU	N	BSMT UNFINISHED	1,344		84.67	113,801
+	BAS	L	BAS AREA	1,344	2005	383.53	515,462
+	USF	L	UP-STRY FIN	1,184	2005	295.62	350,019
+	WDK	N	ATT WOOD DECK	691		57.48	39,716
+	CPA	N	CARPORT	351		65.61	23,030
E	OPA	N	OPEN PORCH	182		94.49	17,196
I	PAT	N	PATIO	288		20.08	5,784
	FPL	O	FPL, FIREPLACE	1		15,348.60	15,349
	ODS	O	OUT DOOR SHOWER	1		0.00	

TOTAL RCN	1,090,157
CONDITION ELEM	CD

EFF.YR/AGE	2005 / 17	
COND	17	17 %
FUNC	0	
ECON	0	
DEPR	17	% GD 83
RCNLD		$904,800