Key: 994

Town of TRURO - Fiscal Year 2024

9/27/2023 7:11 pm SEQ #: 947

LEGAL

CURRENT OWNER	PARCEL ID	LOCATION
MARTIN MARGO PO BOX 106 NO TRURO, MA 02652-0106	36-106-0	9 POND VILLAGE HGTS RD

TRANSFER HISTORY	DOS	T	SALE PRICE	BK-PG (Cert)
MARTIN MARGO	02/16/1973	99		1807-114+

CLASS	CLASS%	DESCRIPTION	BN ID	BN	CARD
1010	100	SINGLE FAMILY		1	1 of 1

PMT NO	PMT DT	TY	DESC	AMOUNT	INSP	BY	1st	%
NP	07/26/2022	20	NO PERMIT		07/26/2022	LG	100	100
22-012	01/11/2022	80	SOLAR TAXABL	30,222	07/26/2022	LG	100	100
FY2019		35	RES EXEMPT		05/13/2020		0	0
19-363X	11/07/2019	90	BP NVC	9,791	01/23/2020	LG	100	100
13-168	07/11/2013	90	BP NVC	5,000	10/29/2013	FC	100	100

LAND

CD	T	AC/SF/UN	Nbhd	Infl1	Infl2	ADJ BASE	SAF	Infl3	Lpi	VC	CREDIT AMT	ADJ VALUE
100	A	0.775	11 1.00	1 1.00	1 1.00	630,175	1.00	1 1.00	V6 1.75			488,390
300	A	0.090	11 1.00	1 1.00	1 1.00	48,125	1.00	1 1.00	V6 1.75			4,330

TOTAL	37,679 SF	ZONING	RES	FRNT	0
Nbhd	NORTH TRURO	NOTE	HAS UNF 2ND FLR PER 7/09 M+L (FRAMED; NO INSUL; SUBFLR PER 1/31/14 VISIT		
Infl1	NO ADJ				
Infl2	NO ADJ				

ASSESSED	CURRENT	PREVIOUS
LAND	492,700	428,400
BUILDING	691,900	579,500
DETACHED	44,000	37,300
OTHER	0	0
TOTAL	**1,228,600**	**1,045,200**

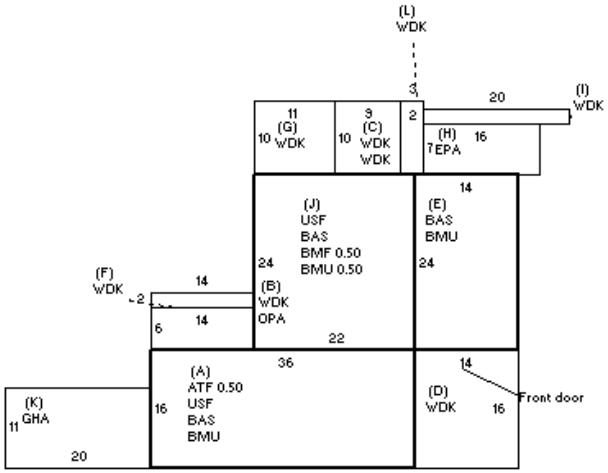

DETACHED

TY	QUAL	COND	DIM/NOTE	YB	UNITS	ADJ PRICE	RCNLD
GUL	G 1.18	A 0.75	30*28	1986	840	55.58	35,000
WDK	A 1.00	A 0.75	IRREG	1986	500	11.00	4,100
GHP	L 0.83	D 0.20	9*13		117	2.41	100
SHF	G 1.18	G 0.90	8*10		80	19.44	1,400
SHF	G 1.18	G 0.90	8*10		80	19.44	1,400
SHF	G 1.18	G 0.90	10*12		120	18.89	2,000

PHOTO 07/26/2022

BLDG COMMENTS

BUILDING

BUILDING	CD	ADJ	DESC
MODEL	1		RESIDENTIAL
STYLE	5	1.05	COLONIAL [100%]
QUALITY	A	1.00	AVERAGE [100%]
FRAME	1	1.00	WOOD FRAME [100%]

MEASURE	7/26/2022	LG
LIST	7/26/2022	LG
REVIEW	11/15/2010	MR

YEAR BLT	1976	SIZE ADJ	0.990
NET AREA	2,544	DETAIL ADJ	1.005
$NLA(RCN)	$400	OVERALL	1.070

CAPACITY	UNITS	ADJ
STORIES(FAR)	2	1.00
ROOMS	6	1.00
BEDROOMS	3	1.00
BATHROOMS	3	1.00
FIXTURES	9	$6,300
UNITS	0	1.00

ELEMENT	CD	DESCRIPTION	ADJ
FOUNDATION	4	BSMT WALL	1.00
EXT. COVER	1	WOOD SHINGLES	1.00
ROOF SHAPE	1	GABLE	1.00
ROOF COVER	1	ASPHALT SHINGLE	1.00
FLOOR COVER	2	SOFTWOOD	1.00
INT. FINISH	2	DRYWALL	1.00
HEATING/COOLING	2	HOT WATER	1.02
FUEL SOURCE	1	OIL	1.00

S	BAT	T	DESCRIPTION	UNITS	YB	ADJ PRICE	RCN
+	BMU	N	BSMT UNFINISHED	1,176		73.09	85,956
+	BAS	L	BAS AREA	1,104	1976	315.46	348,267
+	USF	L	UP-STRY FIN	1,104	1976	245.59	271,129
A	ATF	N	FINISHED ATTIC	288		165.59	47,689
B	OPA	N	OPEN PORCH	84		95.02	7,982
+	WDK	N	ATT WOOD DECK	696		47.75	33,232
E	BAS	L	BAS AREA	336	1976	315.46	105,995
H	EPA	N	ENCL PORCH	112		146.92	16,455
J	BMF	N	BSMT FINISH	264		151.34	39,955
K	GHA	N	GREENHOUSE	220		132.23	29,092
	F22	O	FPL 2S 2OP	1		22,313.10	22,313
	MST	O	MASONRY STACK	1		3,187.40	3,187
	ODS	O	OUT DOOR SHOWER	1		0.00	

TOTAL RCN	1,017,551
CONDITION ELEM	CD
EFF.YR/AGE	1981 / 41
COND	32 32 %
FUNC	0
ECON	0
DEPR	32 % GD 68
RCNLD	$691,900